GESSI

73607

GPF7360700000G000

INVERSO

validity date
≥ 06/2026



Bidet mixer with waste and connecting flexibles. DIAMANTATO.

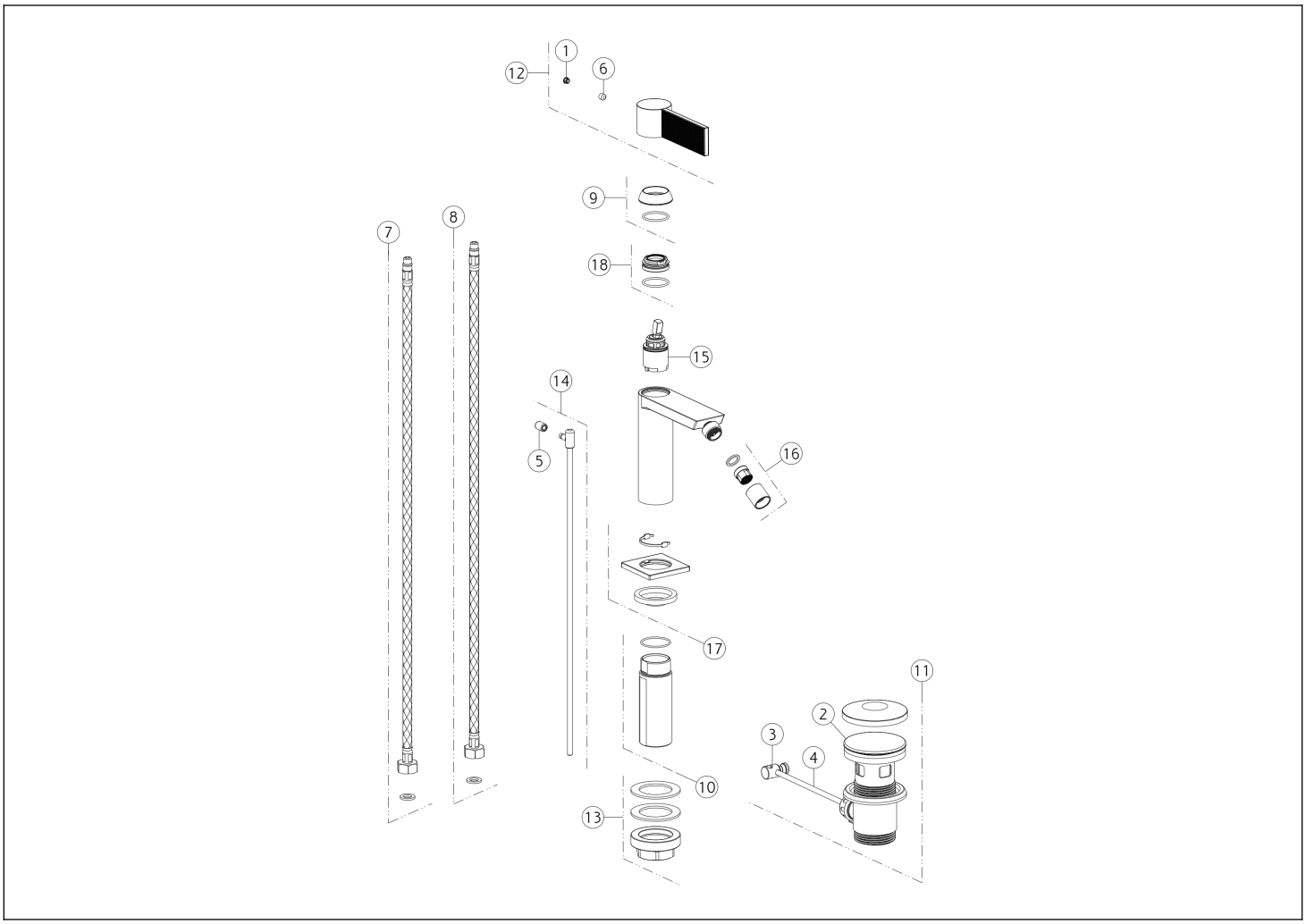

N°	Code	Description
1	SP00002	SCREW COVER
2	SP00772	PLUG
3	SP00219	JOINT
4	SP00218	ROD
5	SP00927	KNOB
6	SP00153	SCREW
7	SP01590	RED SUPPLY HOSE
8	SP01591	BLU SUPPLY HOSE
9	SP04804	FINISHING RING NUT

N°	Code	Description
10	SP02372	SHANK
11	PF29264	BASIN WASTE
12	SP04807	HANDLE
13	SP02370	FIXING SET
14	SP02805	PULL ROD
15	SP01442	CARTRIDGE
16	SP02280	AERATOR
17	SP04805	BASE
18	SP01278	FIXING RING NUT

Gessi S.p.A. Parco Gessi, 13037 Serravalle Sesia (Vercelli) Italy Tel. +39 0163 454111 Fax. +39 0163 453150 - www.gessi.com - gessi@gessi.it This drawing, as required by law, may not be made public or reproduced without the written authorization of GESSI S.p.A. Copyright GESSI S.p.A.