GESSI

73609

GPF7360900000G000

INVERSO

validity date
≥ 07/2024



Wall-mounted one-way basin mixer. DIAMANTATO.

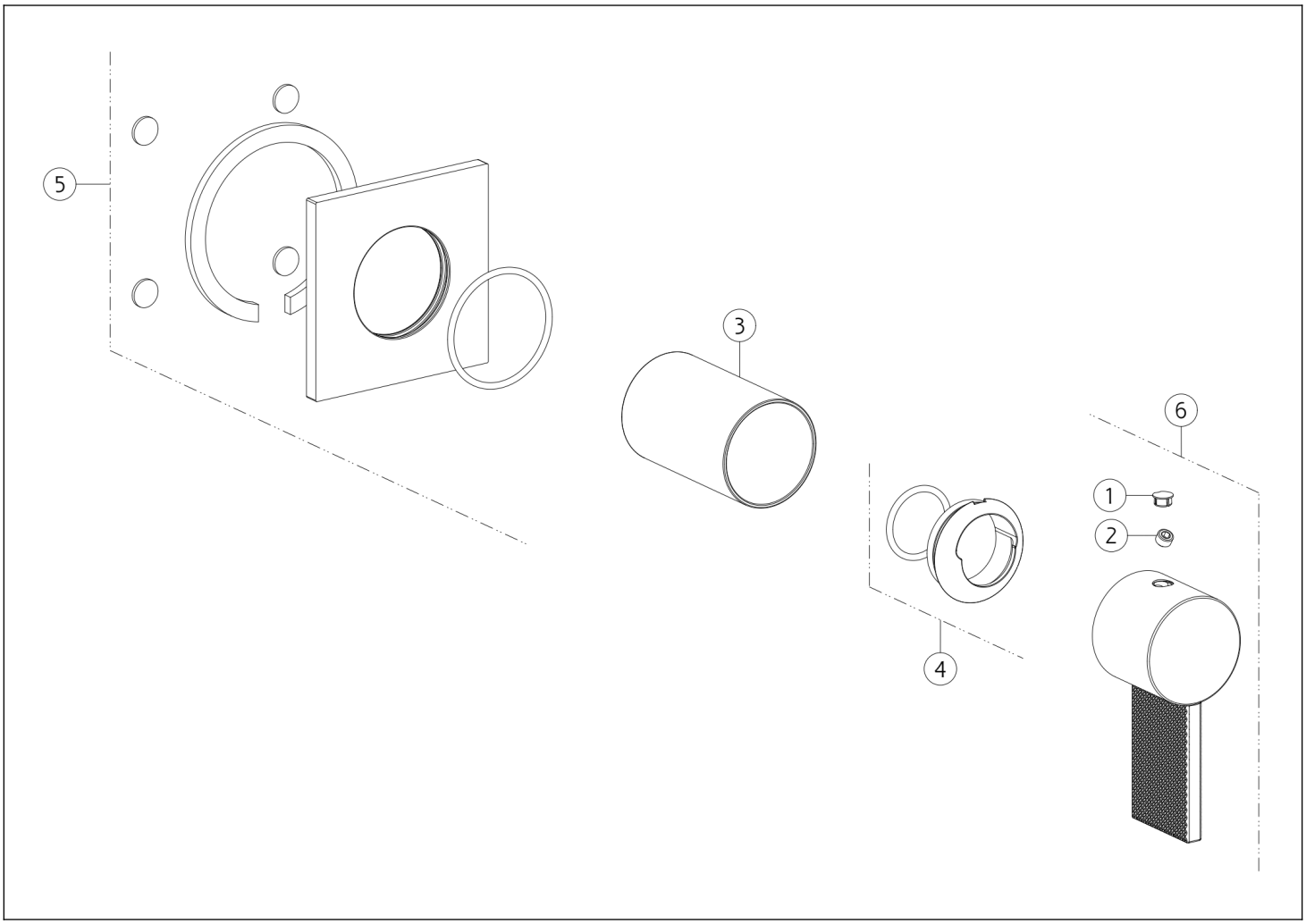

N°	Code	Description
1	SP00002	SCREW COVER
2	SP00137	SCREW
3	SP03269	FINISHING BUSHING

N°	Code	Description
4	SP03266	FINISHING RING NUT
5	SP04817	COVER
6	SP04821	HANDLE

Gessi S.p.A. Parco Gessi, 13037 Serravalle Sesia (Vercelli) Italy Tel. +39 0163 454111 Fax. +39 0163 453150 - www.gessi.com - gessi@gessi.it This drawing, as required by law, may not be made public or reproduced without the written authorization of GESSI S.p.A. Copyright GESSI S.p.A.