GESSI

73641

GPF7364100000G000

INVERSO

validity date
≥ 07/2024



Sliding rail with water outlet, antilimestone handshower and 1,50 m flexible hose. DIAMANTATO.

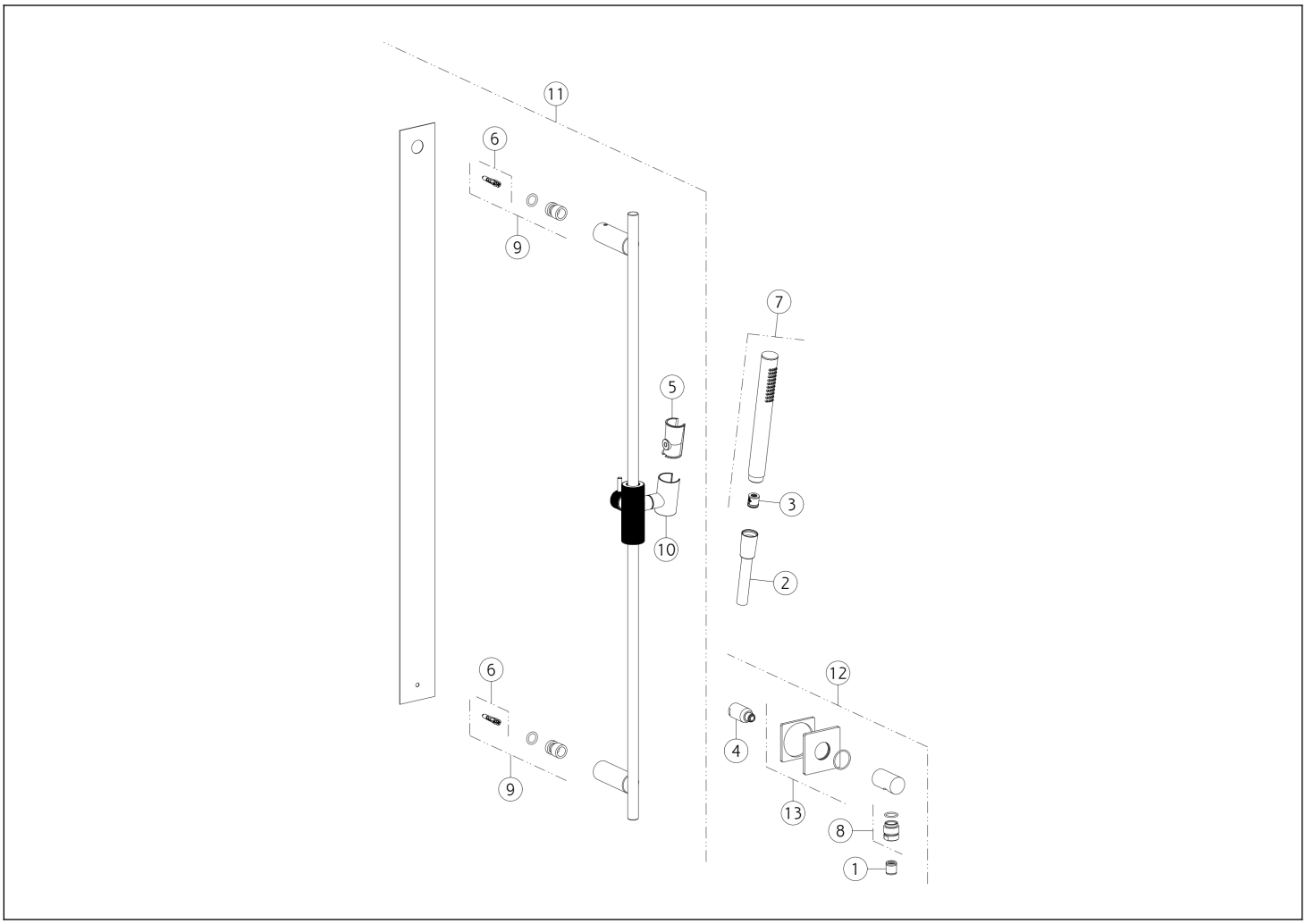

N°	Code	Description
1	SP00014	NON RETURN VALVE
2	PF01637	HOSE
3	SP01634	FLOW REGOLATOR
4	SP04472	NIPPLE
5	SP03468	SUPPORT
6	SP01775	FIXING SET
7	PF14371	HANDSHOWER

N°	Code	Description
8	SP01008	NIPPLE
9	SP01760	FIXING SET
10	SP03993	SLIDING SUPPORT
11	PF63485	SLIDING RAIL
12	PF73069	CONNECTION WATER OUTLET
13	SP04871	COVER

Gessi S.p.A. Parco Gessi, 13037 Serravalle Sesia (Vercelli) Italy Tel. +39 0163 454111 Fax. +39 0163 453150 - www.gessi.com - gessi@gessi.it This drawing, as required by law, may not be made public or reproduced without the written authorization of GESSI S.p.A. Copyright GESSI S.p.A.