GESSI

73655

GPF7365500000G000

INVERSO

validity date
≥ 07/2024



Medium version basin mixer with Stop&Go waste and connecting flexibles. DIAMANTATO.

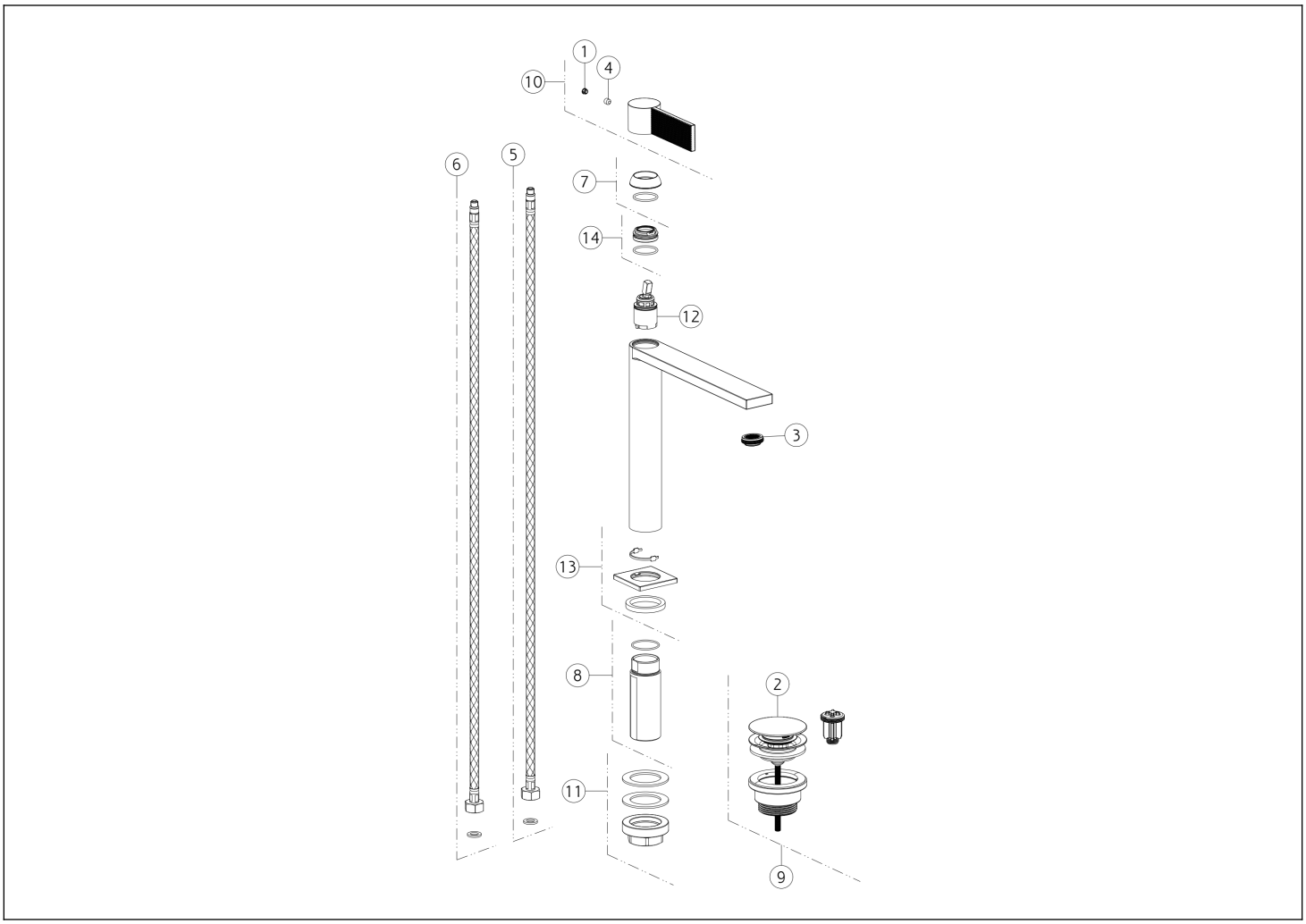

N°	Code	Description
1	SP00002	SCREW COVER
2	SP00772	PLUG
3	SP00923	COMPLETE AERATOR
4	SP00153	SCREW
5	SP01286	BLU SUPPLY HOSE
6	SP01287	RED SUPPLY HOSE
7	SP04804	FINISHING RING NUT

N°	Code	Description
8	SP02372	SHANK
9	PF01421	BASIN WASTE
10	SP04807	HANDLE
11	SP02370	FIXING SET
12	SP01442	CARTRIDGE
13	SP04805	BASE
14	SP01278	FIXING RING NUT

Gessi S.p.A. Parco Gessi, 13037 Serravalle Sesia (Vercelli) Italy Tel. +39 0163 454111 Fax. +39 0163 453150 - www.gessi.com - gessi@gessi.it This drawing, as required by law, may not be made public or reproduced without the written authorization of GESSI S.p.A. Copyright GESSI S.p.A.