GESSI

75004

GPF7500400000G000

INCASTRI

validity date
≥ 06/2026



High version basin mixer without waste, with connecting flexibles.

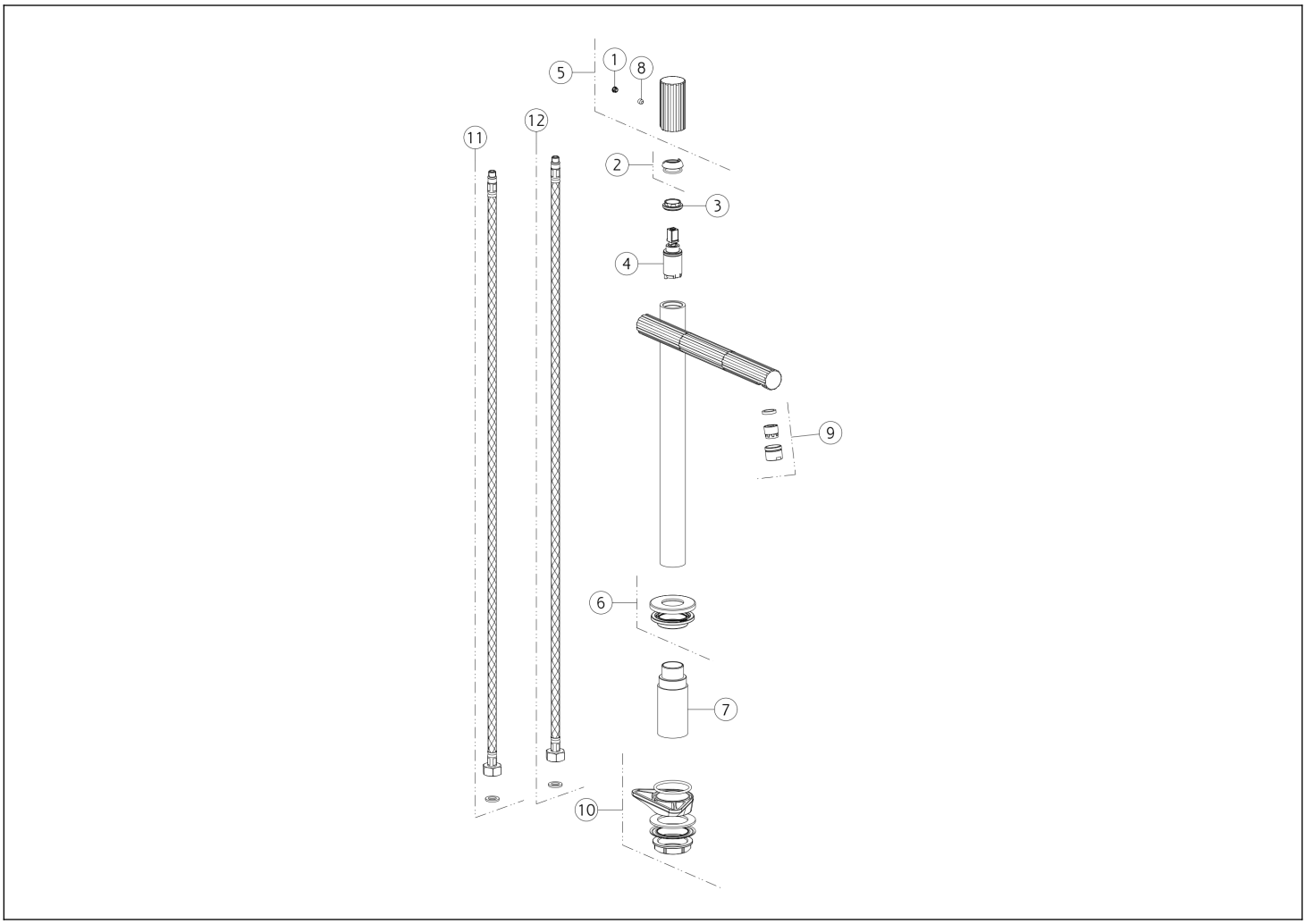

N°	Code	Description
1	SP00002	SCREW COVER
2	SP05400	FINISHING RING NUT
3	SP05438	FIXING RING NUT
4	SP05439	CARTRIDGE
5	SP05440	HANDLE
6	SP05441	BASE

N°	Code	Description
7	SP05442	SHANK
8	SP00610	SCREW
9	SP03672	COMPLETE AERATOR
10	SP01250	FIXING SET
11	SP01287	RED SUPPLY HOSE
12	SP01286	BLU SUPPLY HOSE

Gessi S.p.A. Parco Gessi, 13037 Serravalle Sesia (Vercelli) Italy Tel. +39 0163 454111 Fax. +39 0163 453150 - www.gessi.com - gessi@gessi.it This drawing, as required by law, may not be made public or reproduced without the written authorization of GESSI S.p.A. Copyright GESSI S.p.A.