GESSI

75014

GPF7501400000G000

INCASTRI

validity date
≥ 04/2026



Three-holes basin mixer, without waste, with connecting flexibles.

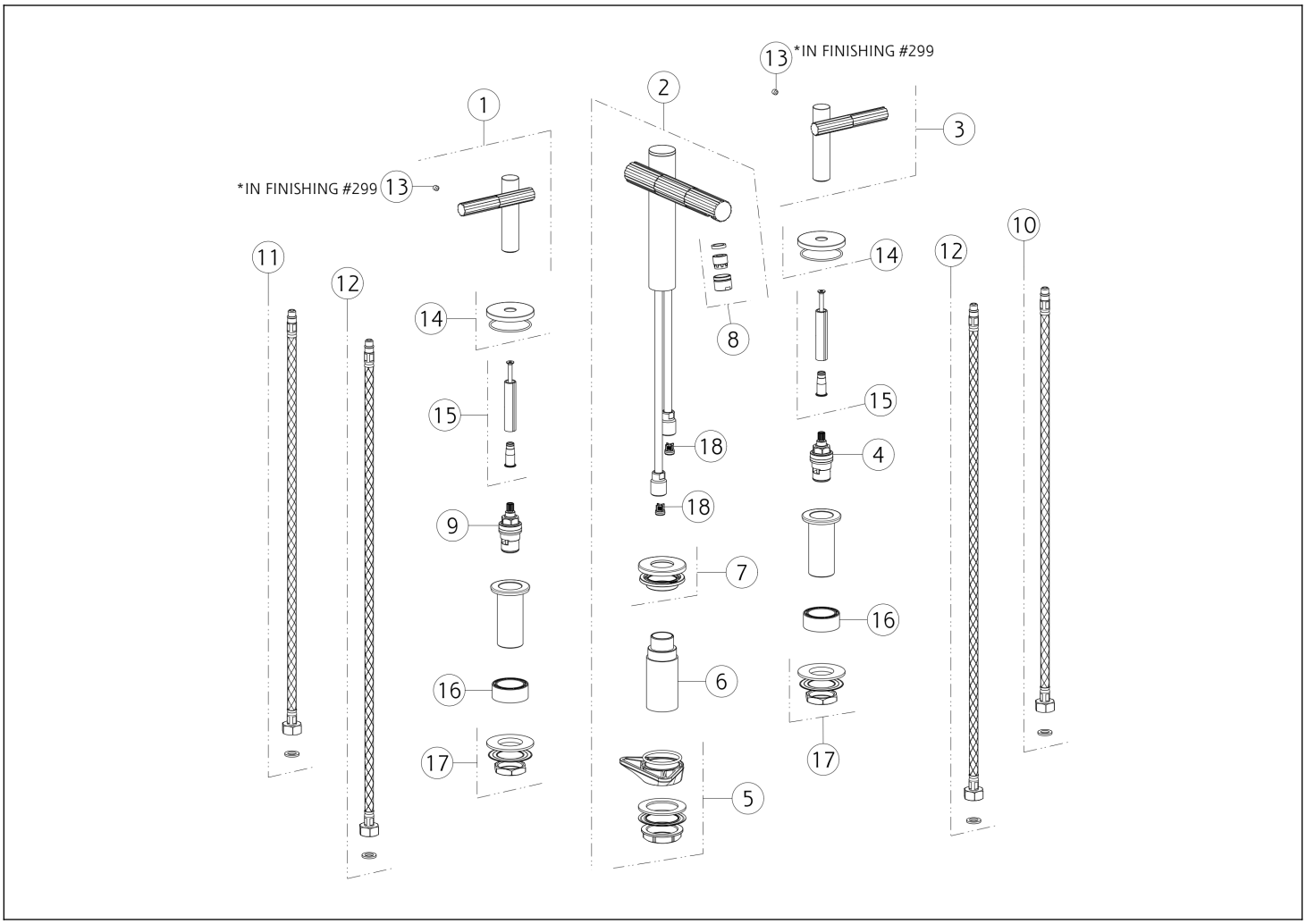

N°	Code	Description
1	SP05497	LEFT HANDLE
2	SP05498	COMPLETE SPOUT
3	SP05496	RIGHT HANDLE
4	SP00590	HEADVALVE
5	SP01250	FIXING KIT
6	SP05442	SHANK
7	SP05494	BASE PLATE
8	SP05450	COMPLETE AERATOR
9	SP00129	HEADVALVE

N°	Code	Description
10	SP01284	BLUE SUPPLY HOSE
11	SP01285	RED SUPPLY HOSE
12	SP02916	HOSE
13	SP00610	GRUB SCREW
14	SP05495	ROSETTE
15	SP05493	EXTENSION
16	SP04595	SPACER
17	SP01222	FIXING KIT
18	SP00433	NON RETURN VALVE

Gessi S.p.A. Parco Gessi, 13037 Serravalle Sesia (Vercelli) Italy Tel. +39 0163 454111 Fax. +39 0163 453150 - www.gessi.com - gessi@gessi.it This drawing, as required by law, may not be made public or reproduced without the written authorization of GESSI S.p.A. Copyright GESSI S.p.A.