GESSI

75036

GPF7503600000G000

INCASTRI

validity date
≥ 06/2026



External part wall-mounted shower mixer two-ways with handshower.

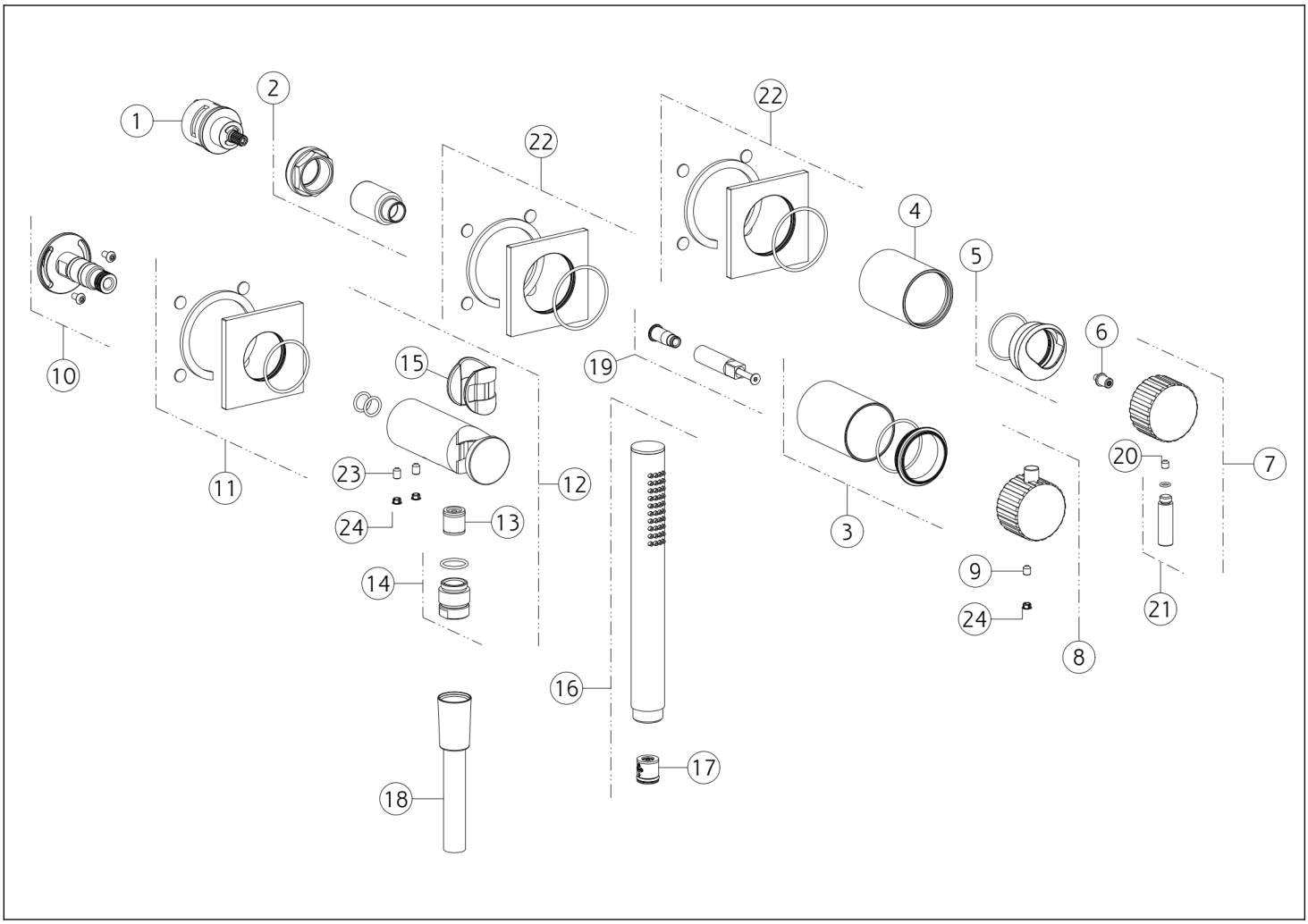

N°	Code	Description
1	SP01758	DIVERTER
2	SP01762	FIXING RING NUT
3	SP04105	BUSH
4	SP03248	FINISHING BUSHING
5	SP03274	FINISHING RING NUT
6	SP04852	SPACER
7	SP05444	HANDLE
8	SP05445	HANDLE
9	SP00284	SCREW
10	SP03332	JOINT
11	SP04855	COVER
12	SP04856	CONNECTION WATER OUTLET WITH FIXED HOOK

N°	Code	Description
13	SP00014	NON RETURN VALVE
14	SP01008	NIPPLE
15	SP01823	BUSH
16	PF14371	HANDSHOWER
17	SP01634	FLOW REGOLATOR
18	PF01637	HOSE
19	SP04103	EXTENSION
20	SP00610	SCREW
21	SP05446	LEVER
22	SP04851	COVER
23	SP00864	SCREW
24	SP00002	SCREW COVER

Gessi S.p.A. Parco Gessi, 13037 Serravalle Sesia (Vercelli) Italy Tel. +39 0163 454111 Fax. +39 0163 453150 - www.gessi.com - gessi@gessi.it This drawing, as required by law, may not be made public or reproduced without the written authorization of GESSI S.p.A. Copyright GESSI S.p.A.