GESSI

75042

GPF7504200000G000

INCASTRI

validity date
≥ 10/2026



Sliding rail with water outlet and 1,50 m flexible hose.

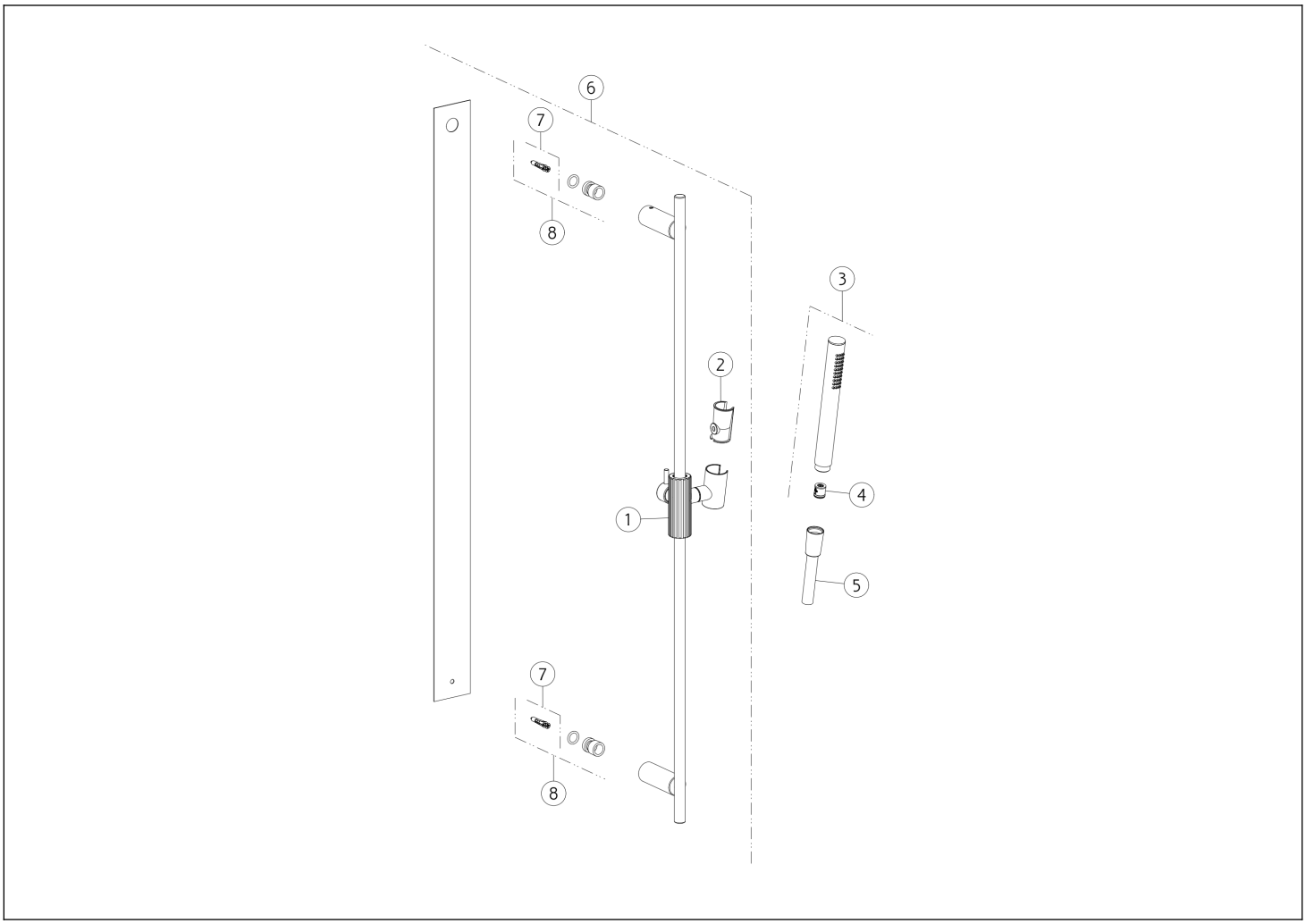

N°	Code	Description
1	SP05629	SLIDER
2	SP03468	HOLDER
3	PF14371	HANDSHOWER
4	SP01634	FLOW LIMITING VALVE

N°	Code	Description
5	PF01637	HOSE
6	PF75044	SLIDING RAIL
7	SP01775	FIXING KIT
8	SP01760	FIXING KIT

Gessi S.p.A. Parco Gessi, 13037 Serravalle Sesia (Vercelli) Italy Tel. +39 0163 454111 Fax. +39 0163 453150 - www.gessi.com - gessi@gessi.it This drawing, as required by law, may not be made public or reproduced without the written authorization of GESSI S.p.A. Copyright GESSI S.p.A.