GESSI

75051

GPF7505100000G000

INCASTRI

validity date
≥ 06/2026



Basin mixer with Stop&Go waste and connecting flexibles.

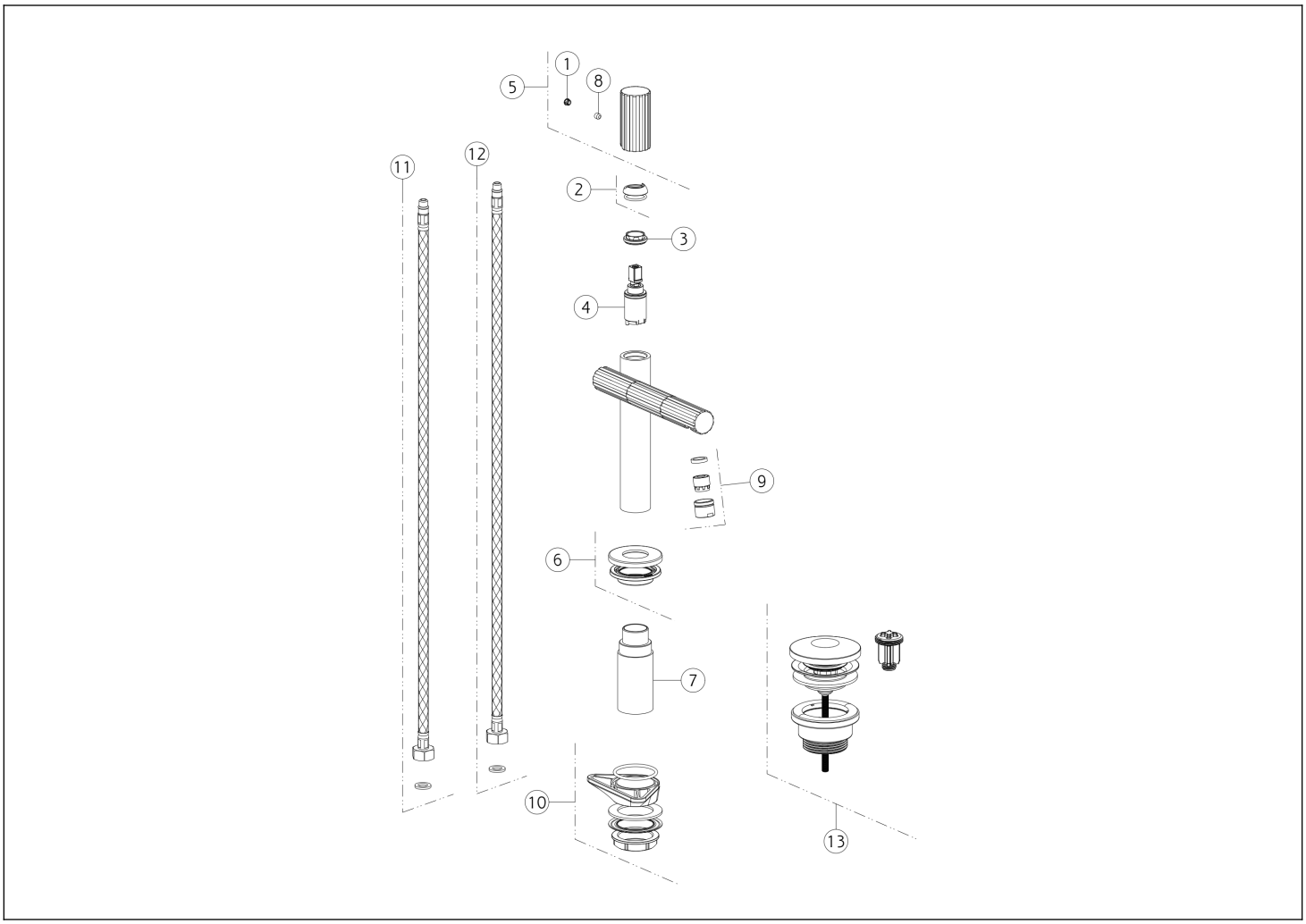

N°	Code	Description
1	SP00002	SCREW COVER
2	SP05400	FINISHING RING NUT
3	SP05438	FIXING RING NUT
4	SP05439	CARTRIDGE
5	SP05440	HANDLE
6	SP05441	BASE
7	SP05442	SHANK

N°	Code	Description
8	SP00610	SCREW
9	SP03672	COMPLETE AERATOR
10	SP01250	FIXING SET
11	SP01590	RED SUPPLY HOSE
12	SP01591	BLU SUPPLY HOSE
13	PF01421	BASIN WASTE

Gessi S.p.A. Parco Gessi, 13037 Serravalle Sesia (Vercelli) Italy Tel. +39 0163 454111 Fax. +39 0163 453150 - www.gessi.com - gessi@gessi.it This drawing, as required by law, may not be made public or reproduced without the written authorization of GESSI S.p.A. Copyright GESSI S.p.A.