GESSI

75061

GPF7506100000G000

INCASTRI

validity date
≥ 06/2026



External part wall-mounted shower mixer one-way.

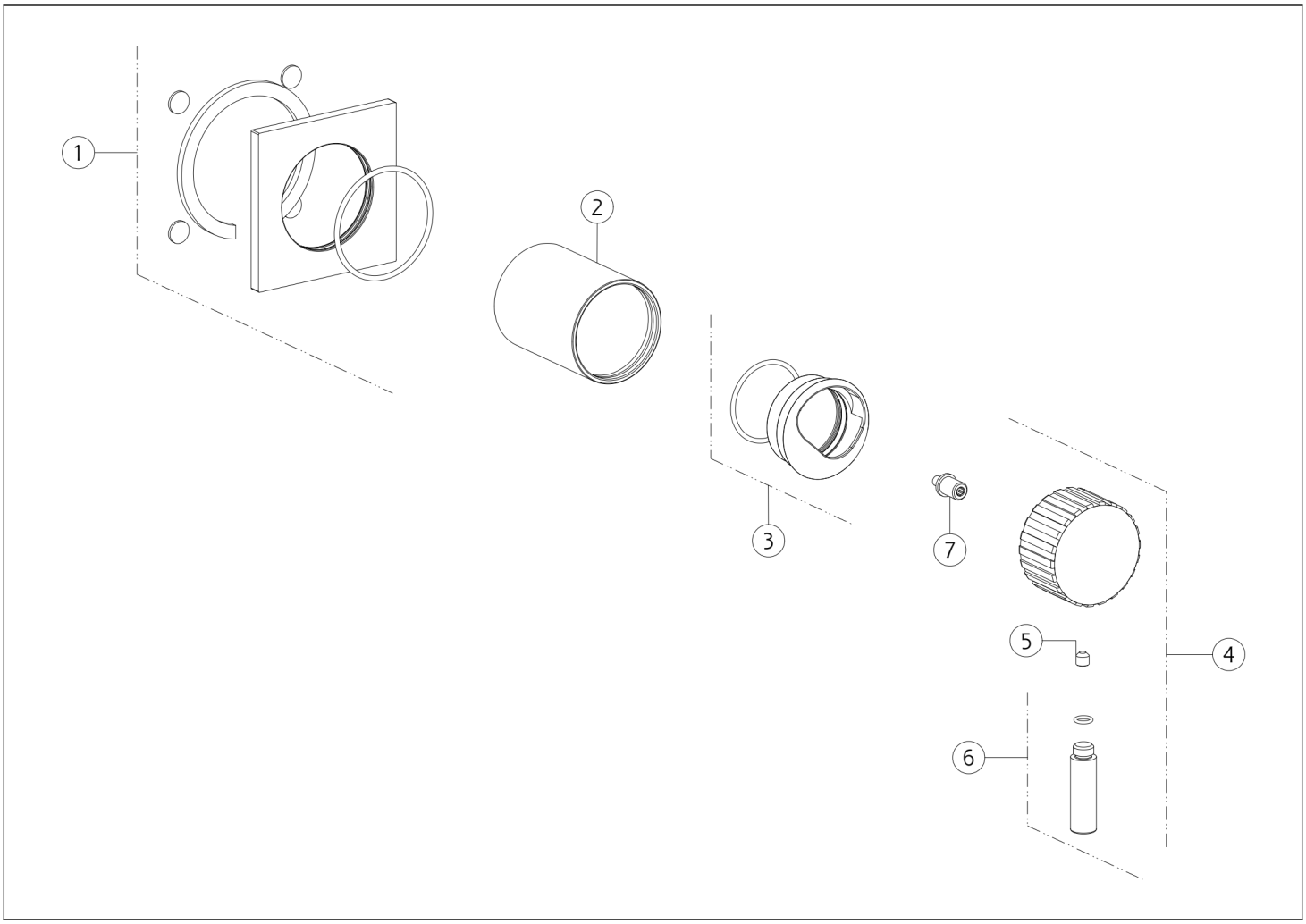

N°	Code	Description
1	SP04851	COVER
2	SP03248	FINISHING BUSHING
3	SP03274	FINISHING RING NUT
4	SP05444	HANDLE

N°	Code	Description
5	SP00610	SCREW
6	SP05446	LEVER
7	SP04852	SPACER

Gessi S.p.A. Parco Gessi, 13037 Serravalle Sesia (Vercelli) Italy Tel. +39 0163 454111 Fax. +39 0163 453150 - www.gessi.com - gessi@gessi.it This drawing, as required by law, may not be made public or reproduced without the written authorization of GESSI S.p.A. Copyright GESSI S.p.A.