GESSI

75103

GPF7510300000G000

INCASTRI

validity date
≥ 06/2026

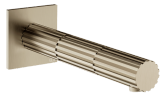

Wall-mounted bath spout.

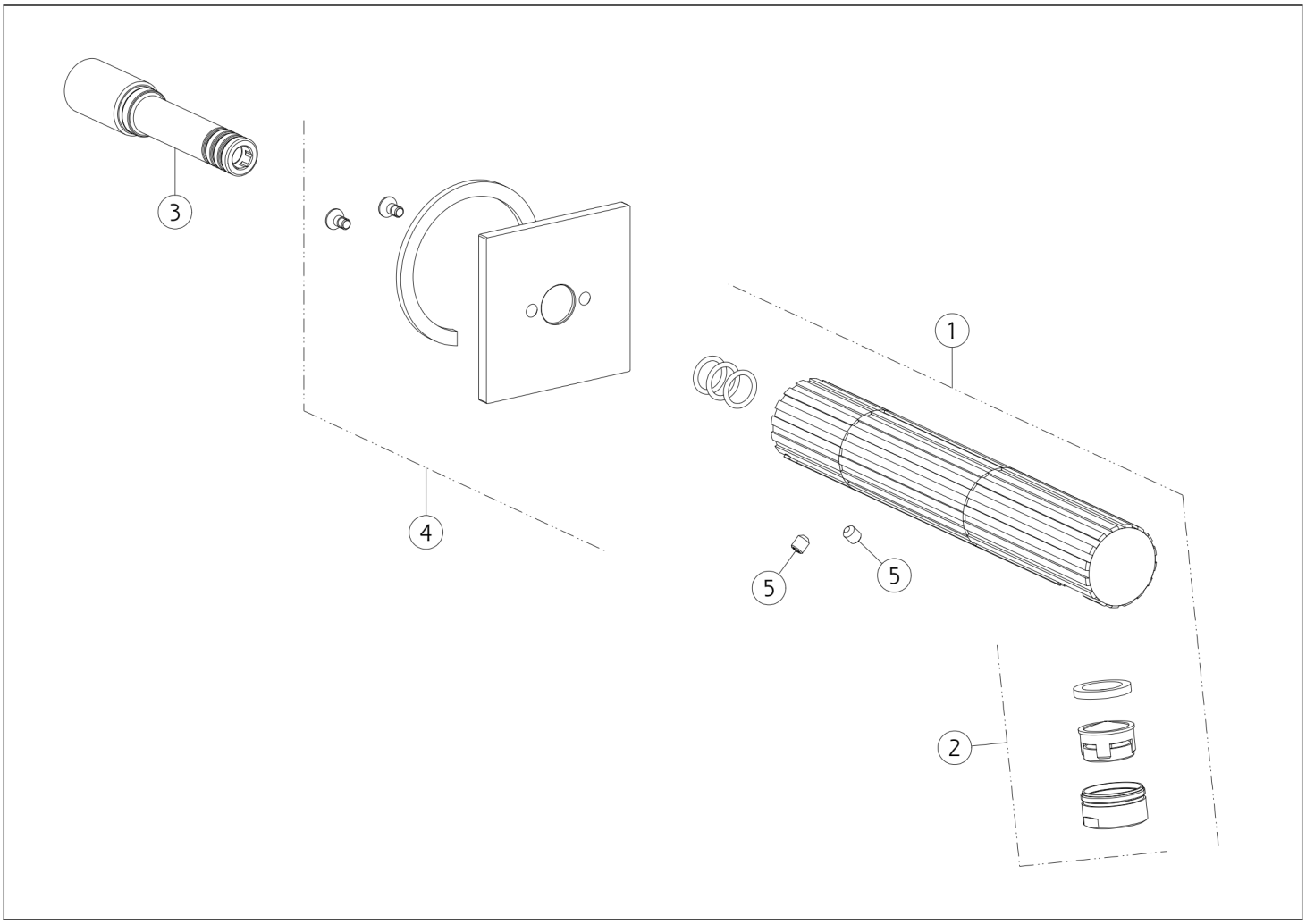

N°	Code	Description
1	SP05451	COMPLETE SPOUT
2	SP05452	COMPLETE AERATOR
3	SP05453	JOINT

N°	Code	Description
4	SP05454	COVER
5	SP00284	SCREW

Gessi S.p.A. Parco Gessi, 13037 Serravalle Sesia (Vercelli) Italy Tel. +39 0163 454111 Fax. +39 0163 453150 - www.gessi.com - gessi@gessi.it This drawing, as required by law, may not be made public or reproduced without the written authorization of GESSI S.p.A. Copyright GESSI S.p.A.