GESSI

75109

GPF7510900000G000

INCASTRI

validity date
≥ 06/2026



External part for wall-mounted separate control.

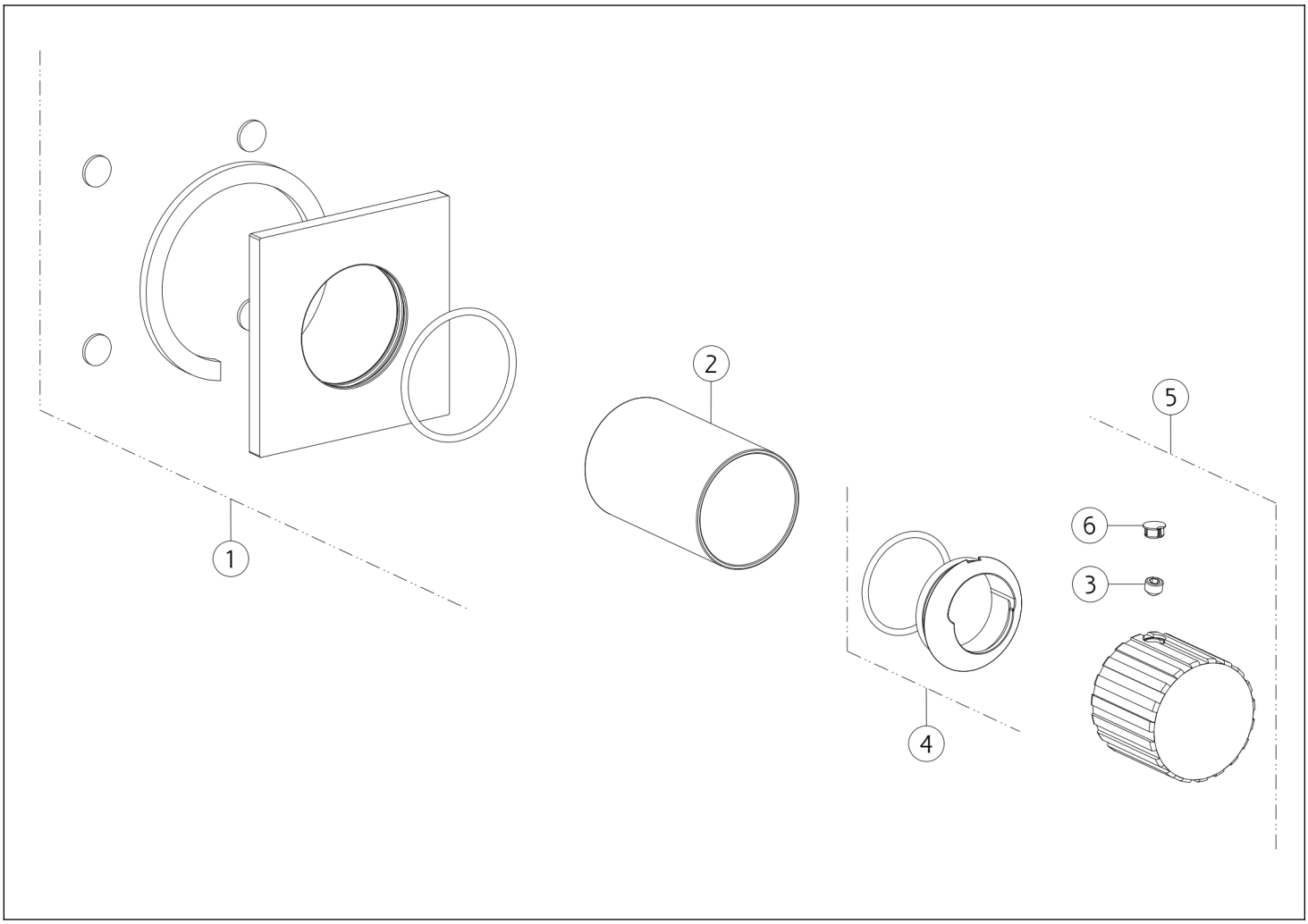

N°	Code	Description
1	SP04817	COVER
2	SP03269	FINISHING BUSHING
3	SP00137	SCREW

N°	Code	Description
4	SP03266	FINISHING RING NUT
5	SP05447	HANDLE
6	SP00002	SCREW COVER

Gessi S.p.A. Parco Gessi, 13037 Serravalle Sesia (Vercelli) Italy Tel. +39 0163 454111 Fax. +39 0163 453150 - www.gessi.com - gessi@gessi.it This drawing, as required by law, may not be made public or reproduced without the written authorization of GESSI S.p.A. Copyright GESSI S.p.A.