GESSI

# 75133

GPF7513300000G000

## INCASTRI

validity date
≥ 06/2026



External part wall-mounted thermostatic shower mixer one-way.

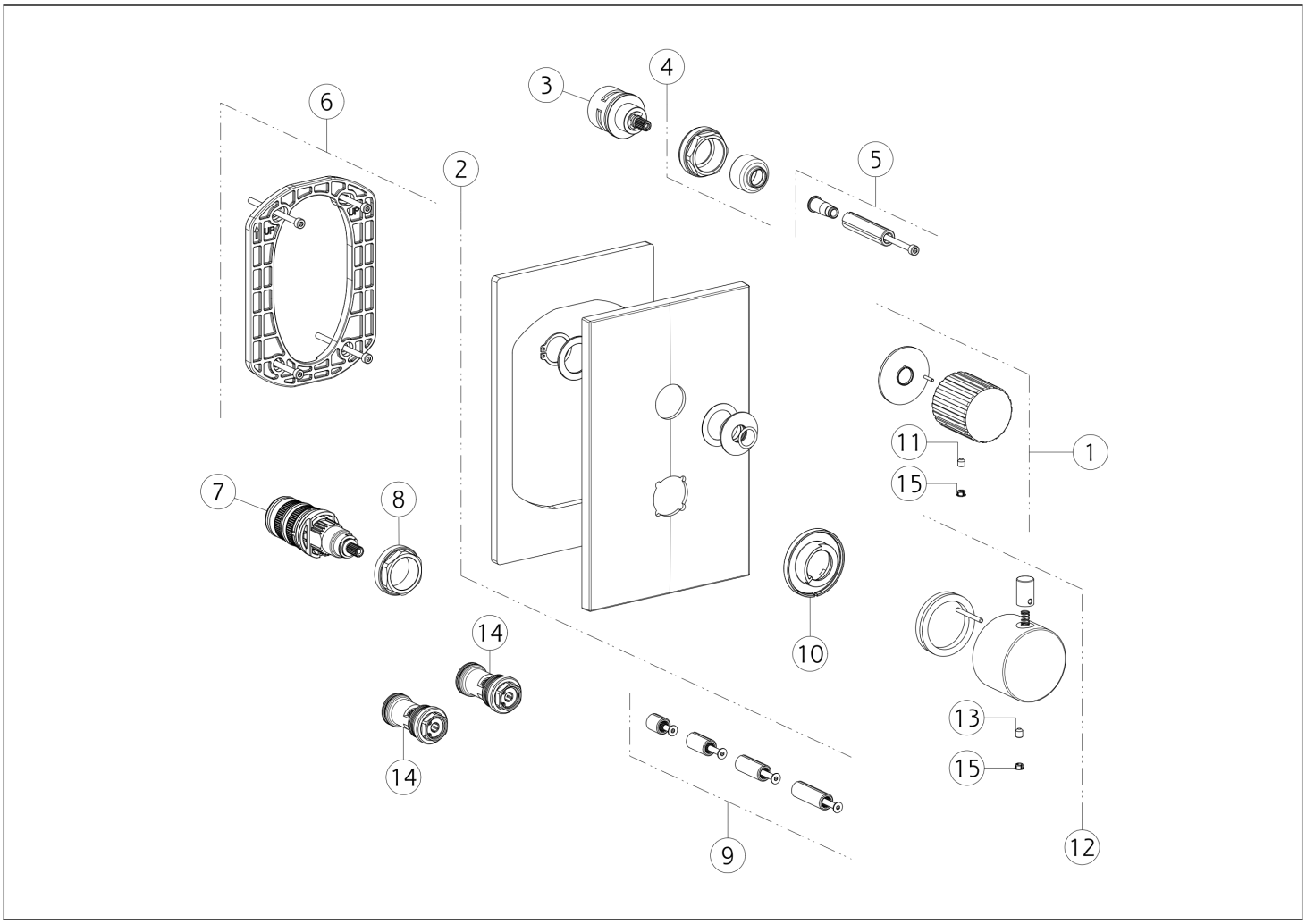


| N° | Code | Description |
|---|---|---|
| 1 | SP05505 | HANDLE |
| 2 | SP05506 | FINISHING PLATE |
| 3 | SP01772 | DIVERTER |
| 4 | SP01945 | FIXING RING NUT |
| 5 | SP01933 | EXTENSION |
| 6 | SP01868 | SUB PLATE |
| 7 | SP01936 | THERMOSTATIC CARTRIDGE |
| 8 | SP01941 | FIXING RING NUT |

| N° | Code | Description |
|---|---|---|
| 9 | SP01931 | EXTENSION |
| 10 | SP02846 | INDICATOR RING |
| 11 | SP00610 | SCREW |
| 12 | SP04877 | HANDLE |
| 13 | SP00284 | SCREW |
| 14 | SP01942 | FILTER |
| 15 | SP00002 | SCREW COVER |

Gessi S.p.A. Parco Gessi, 13037 Serravalle Sesia (Vercelli) Italy Tel. +39 0163 454111 Fax. +39 0163 453150 - www.gessi.com - gessi@gessi.it This drawing, as required by law, may not be made public or reproduced without the written authorization of GESSI S.p.A. Copyright GESSI S.p.A.