GESSI

75135

GPF7513500000G000

INCASTRI

validity date
≥ 10/2026



External part wall-mounted thermostatic shower mixer two-ways.

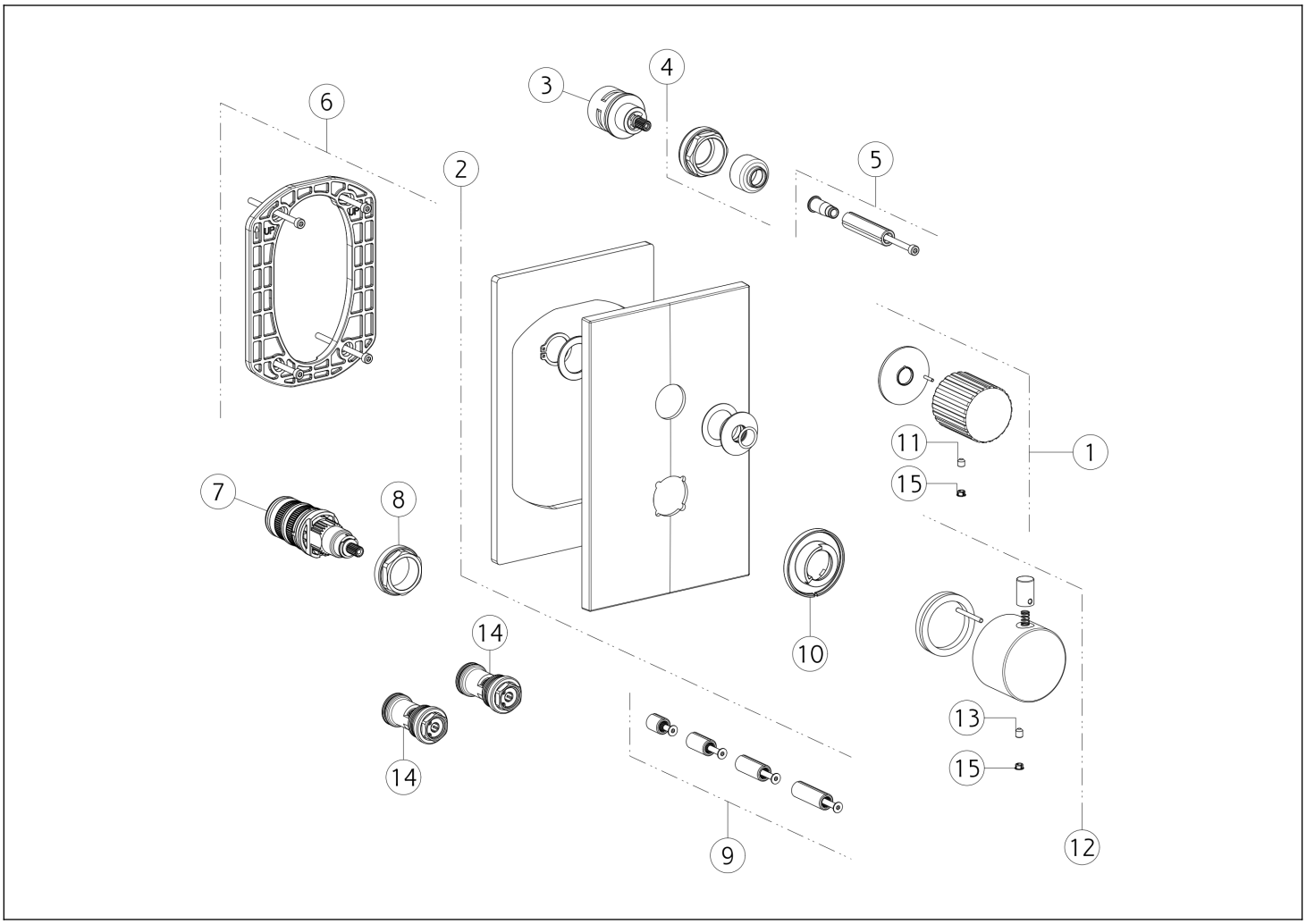

N°	Code	Description
1	SP05505	HANDLE
2	SP05507	FINISHING PLATE
3	SP01793	DIVERTER
4	SP01945	FIXING RING NUT
5	SP01933	EXTENSION
6	SP01868	BACK PLATE
7	SP01936	THERMOSTATIC CARTRIDGE
8	SP01941	FIXING RING NUT

N°	Code	Description
9	SP01931	EXTENSION
10	SP02846	INDICATOR RING
11	SP00610	GRUB SCREW
12	SP04877	HANDLE
13	SP00284	GRUB SCREW
14	SP01942	FILTER
15	SP00002	SCREW COVER

Gessi S.p.A. Parco Gessi, 13037 Serravalle Sesia (Vercelli) Italy Tel. +39 0163 454111 Fax. +39 0163 453150 - www.gessi.com - gessi@gessi.it This drawing, as required by law, may not be made public or reproduced without the written authorization of GESSI S.p.A. Copyright GESSI S.p.A.