GESSI

75148

GPF7514800000G000

INCASTRI

validity date
≥ 02/2026

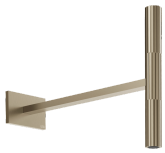

Wall-mounted headshower.

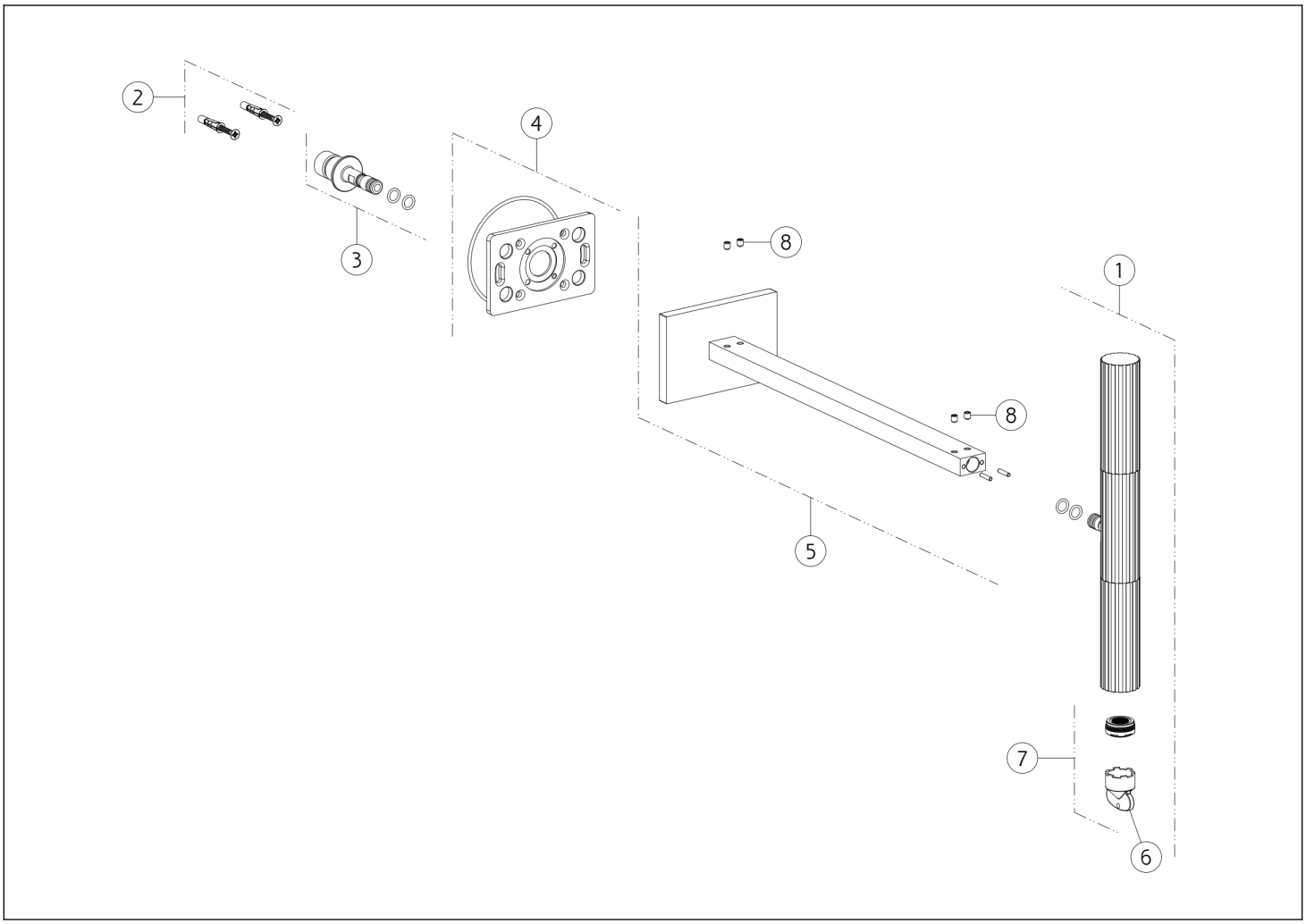

N°	Code	Description
1	SP05760	SPOUT
2	SP00031	FIXING KIT
3	SP05746	NIPPLE
4	SP05747	PLATE

N°	Code	Description
5	SP05748	SHOWER ARM
6	SP00151	KEY
7	SP05745	AERATOR
8	SP00284	GRUB SCREW

Gessi S.p.A. Parco Gessi, 13037 Serravalle Sesia (Vercelli) Italy Tel. +39 0163 454111 Fax. +39 0163 453150 - www.gessi.com - gessi@gessi.it This drawing, as required by law, may not be made public or reproduced without the written authorization of GESSI S.p.A. Copyright GESSI S.p.A.