GESSI

75168

GPF7516800000G000

validity date
≥ 02/2026



TONDO

Wall-mounted adjustable headshower.

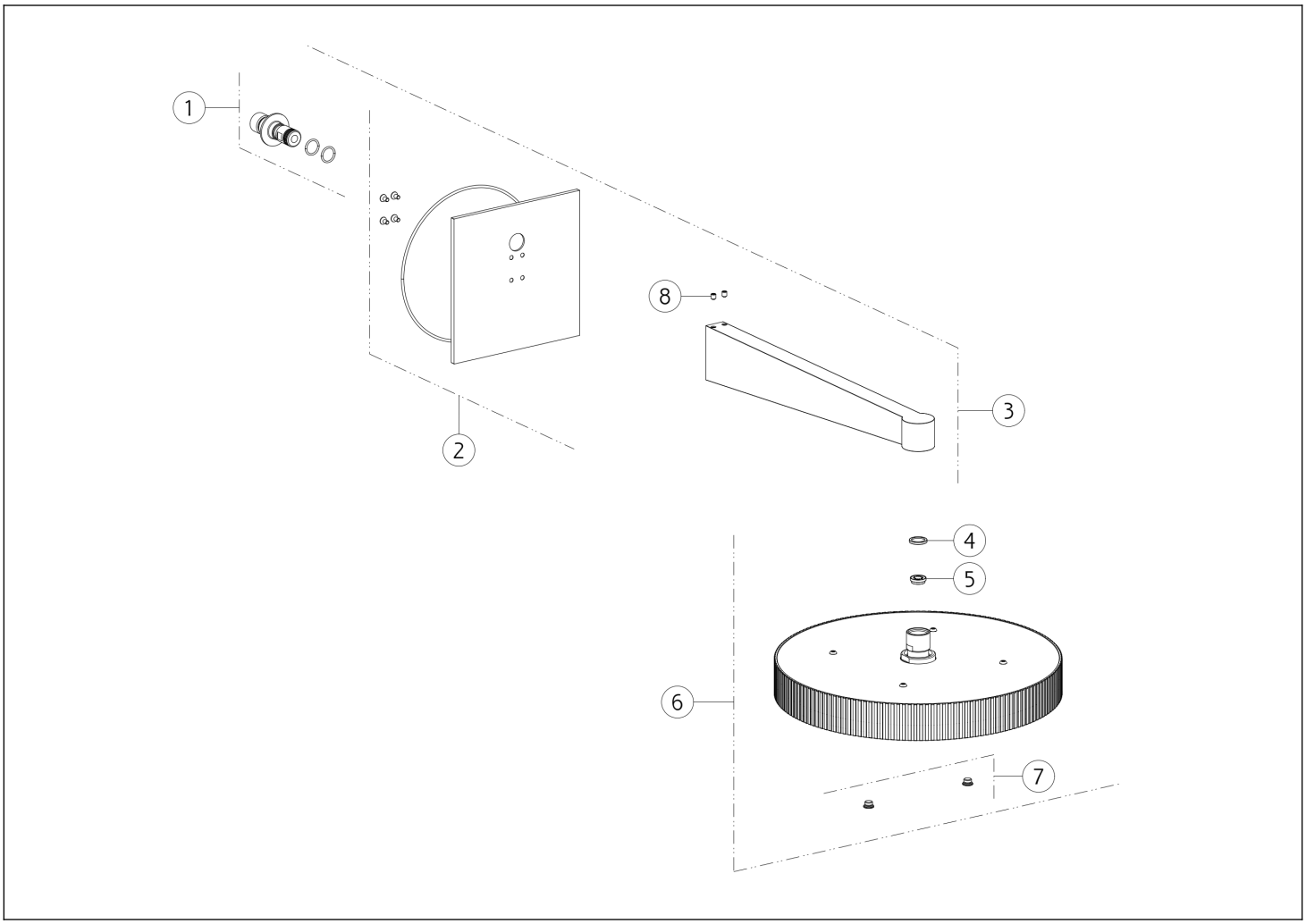

N°	Code	Description
1	SP05286	NIPPLE
2	SP05288	ROSETTE
3	SP05270	SHOWER ARM
4	SP04574	FILTER GASKET

N°	Code	Description
5	SP00967	FLOW LIMITING VALVE
6	SP05618	SHOWERHEAD
7	SP03039	SCREW
8	SP00284	GRUB SCREW

Gessi S.p.A. Parco Gessi, 13037 Serravalle Sesia (Vercelli) Italy Tel. +39 0163 454111 Fax. +39 0163 453150 - www.gessi.com - gessi@gessi.it This drawing, as required by law, may not be made public or reproduced without the written authorization of GESSI S.p.A. Copyright GESSI S.p.A.