GESSI

75172

GPF7517200000G000

TONDO

validity date
≥ 10/2026



Ceiling-mounted adjustable headshower.

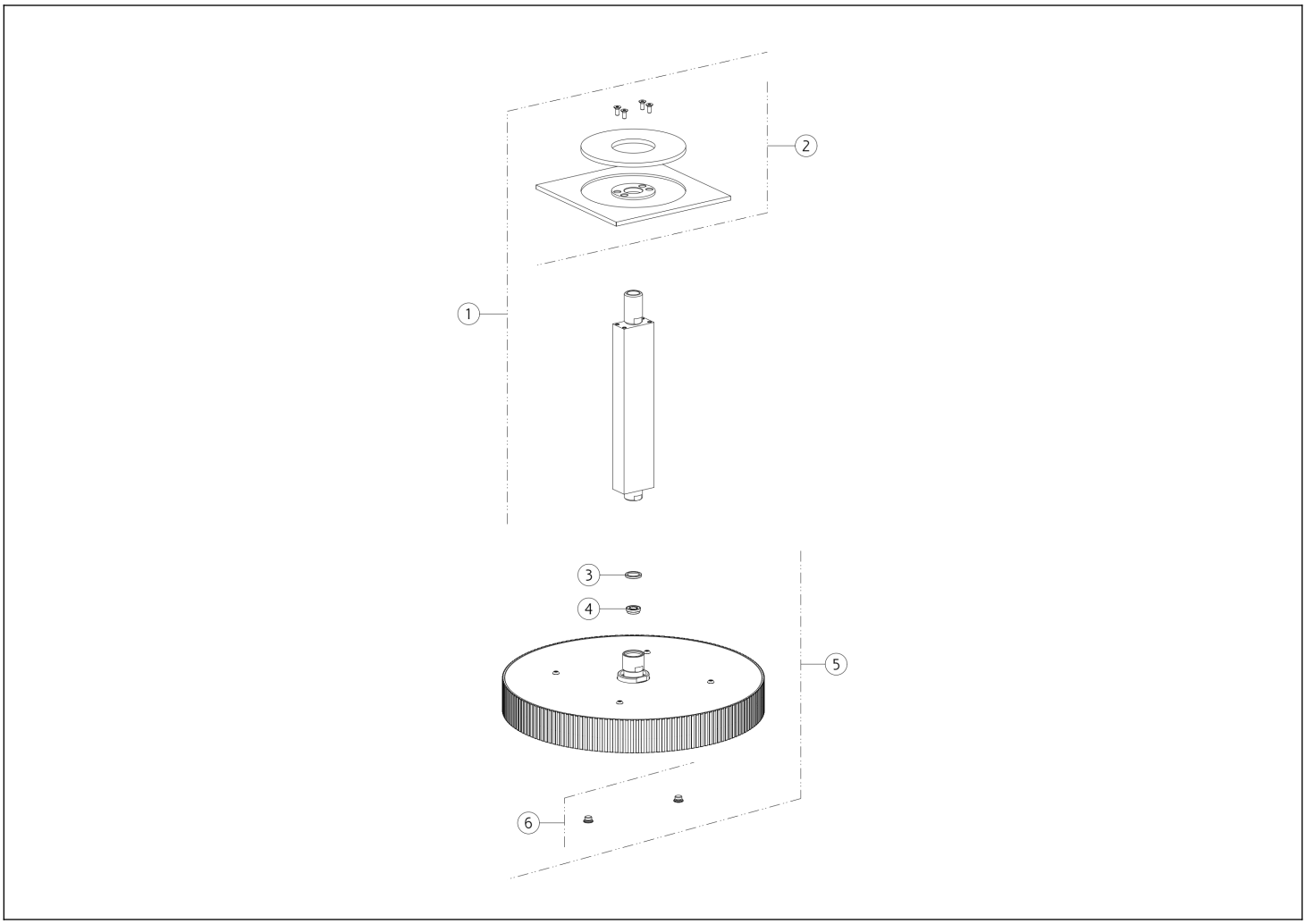

N°	Code	Description
1	SP05621	SHOWER ARM
2	SP05620	ROSETTE
3	SP04574	FILTER GASKET

N°	Code	Description
4	SP00967	FLOW LIMITING VALVE
5	SP05618	SHOWERHEAD
6	SP03039	SCREW

Gessi S.p.A. Parco Gessi, 13037 Serravalle Sesia (Vercelli) Italy Tel. +39 0163 454111 Fax. +39 0163 453150 - www.gessi.com - gessi@gessi.it This drawing, as required by law, may not be made public or reproduced without the written authorization of GESSI S.p.A. Copyright GESSI S.p.A.