GESSI

75288

GPF7528800000G000

INCASTRI

validity date
≥ 06/2026



External part for wall-mounted basin mixer, Sospeso.

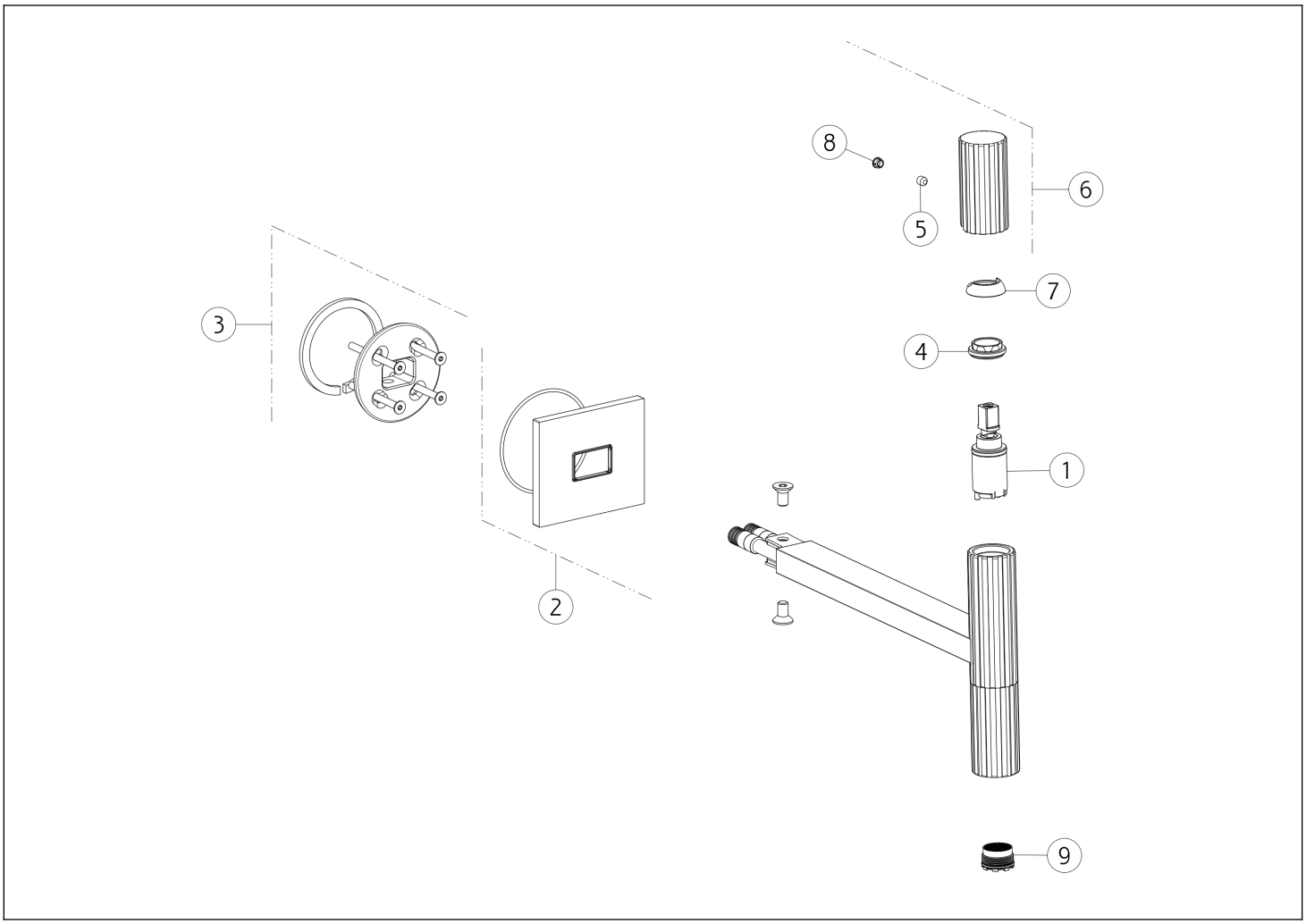

N°	Code	Description
1	SP05439	CARTRIDGE
2	SP05480	COVER
3	SP05481	FLANGE
4	SP05438	FIXING RING NUT
5	SP00610	SCREW

N°	Code	Description
6	SP05440	HANDLE
7	SP05400	FINISHING RING NUT
8	SP00002	SCREW COVER
9	SP05482	AERATOR

Gessi S.p.A. Parco Gessi, 13037 Serravalle Sesia (Vercelli) Italy Tel. +39 0163 454111 Fax. +39 0163 453150 - www.gessi.com - gessi@gessi.it This drawing, as required by law, may not be made public or reproduced without the written authorization of GESSI S.p.A. Copyright GESSI S.p.A.