GESSI

75304

GPF7530400000G000

INCASTRI

validity date
≥ 10/2026

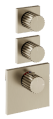

External part wall-mounted thermostatic high-capacity mixer, 2 separate exits. Vertical/Horizontal installation.

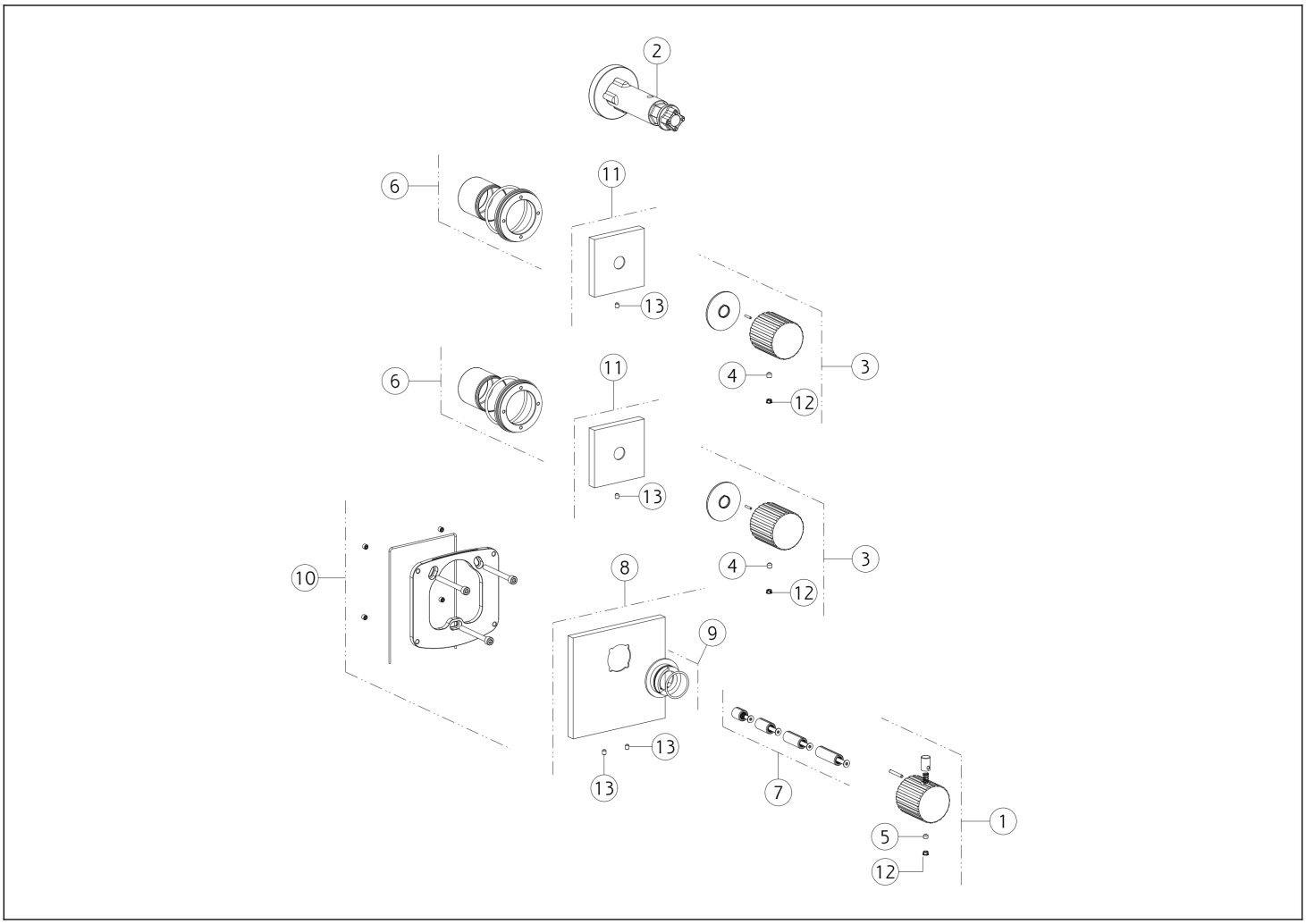

N°	Code	Description
1	SP05560	HANDLE
2	SP01932	KEY
3	SP05505	HANDLE
4	SP00610	GRUB SCREW
5	SP00137	GRUB SCREW
6	SP03897	BACK PLATE
7	SP01931	EXTENSION

N°	Code	Description
8	SP03895	FINISHING PLATE
9	SP01927	INDICATOR RING
10	SP02459	BACK PLATE
11	SP03894	PLATE
12	SP00002	SCREW COVER
13	SP02093	GRUB SCREW

Gessi S.p.A. Parco Gessi, 13037 Serravalle Sesia (Vercelli) Italy Tel. +39 0163 454111 Fax. +39 0163 453150 - www.gessi.com - gessi@gessi.it This drawing, as required by law, may not be made public or reproduced without the written authorization of GESSI S.p.A. Copyright GESSI S.p.A.