GESSI

75316

GPF7531600000G000

INCASTRI

validity date
≥ 10/2026



External part wall-mounted thermostatic high-capacity mixer, 3 separate exits. Vertical/Horizontal installation.

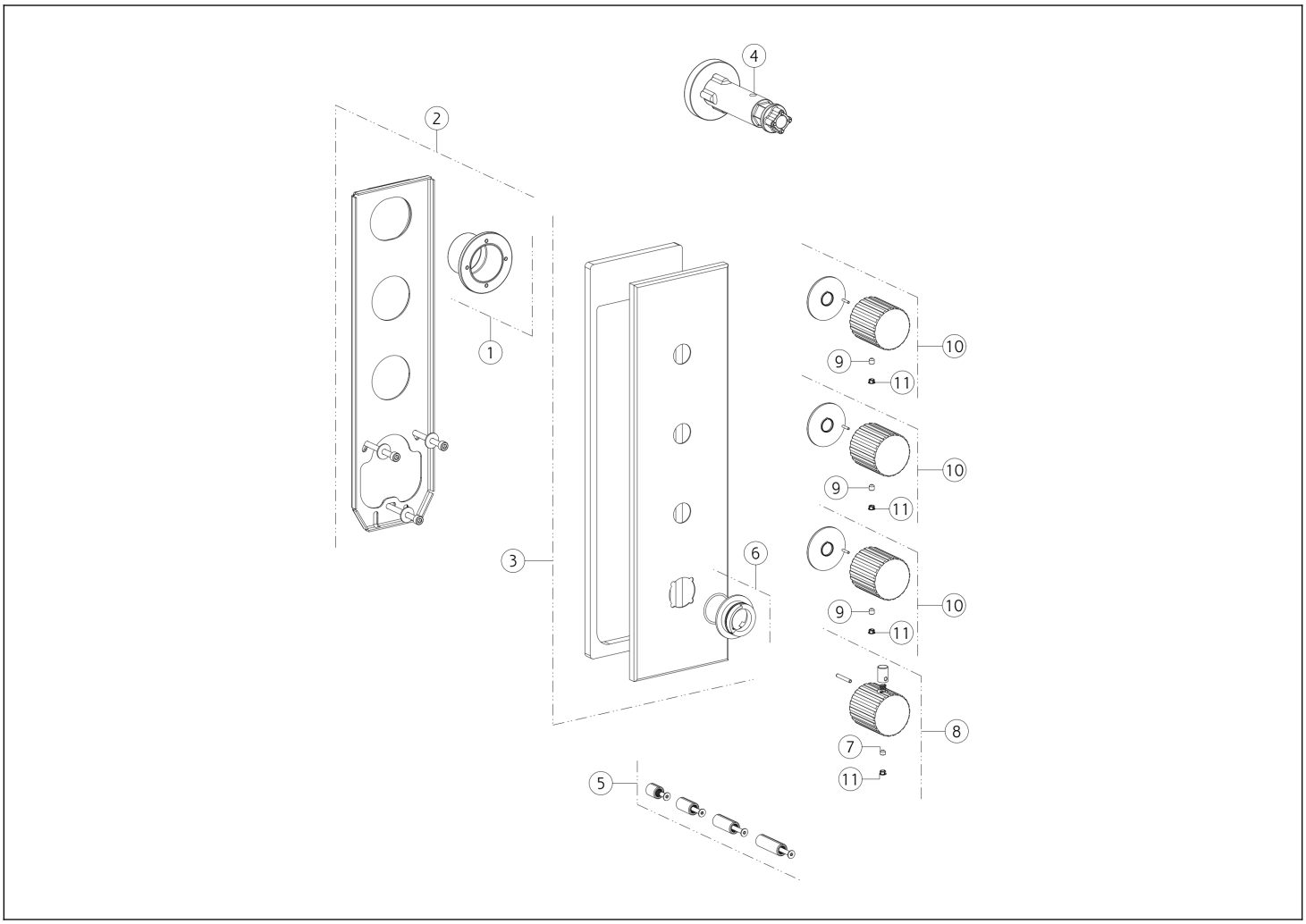

N°	Code	Description
1	SP01930	BUSH
2	SP02069	BACK PLATE
3	SP02068	FINISHING PLATE
4	SP01932	KEY
5	SP01931	EXTENSION
6	SP01739	INDICATOR RING

N°	Code	Description
7	SP00137	GRUB SCREW
8	SP05560	HANDLE
9	SP00610	GRUB SCREW
10	SP05505	HANDLE
11	SP00002	SCREW COVER

Gessi S.p.A. Parco Gessi, 13037 Serravalle Sesia (Vercelli) Italy Tel. +39 0163 454111 Fax. +39 0163 453150 - www.gessi.com - gessi@gessi.it This drawing, as required by law, may not be made public or reproduced without the written authorization of GESSI S.p.A. Copyright GESSI S.p.A.