GESSI

75354

GPF7535400000G000

INCASTRI

validity date
≥ 10/2026



External part wall-mounted thermostatic high-capacity mixer.

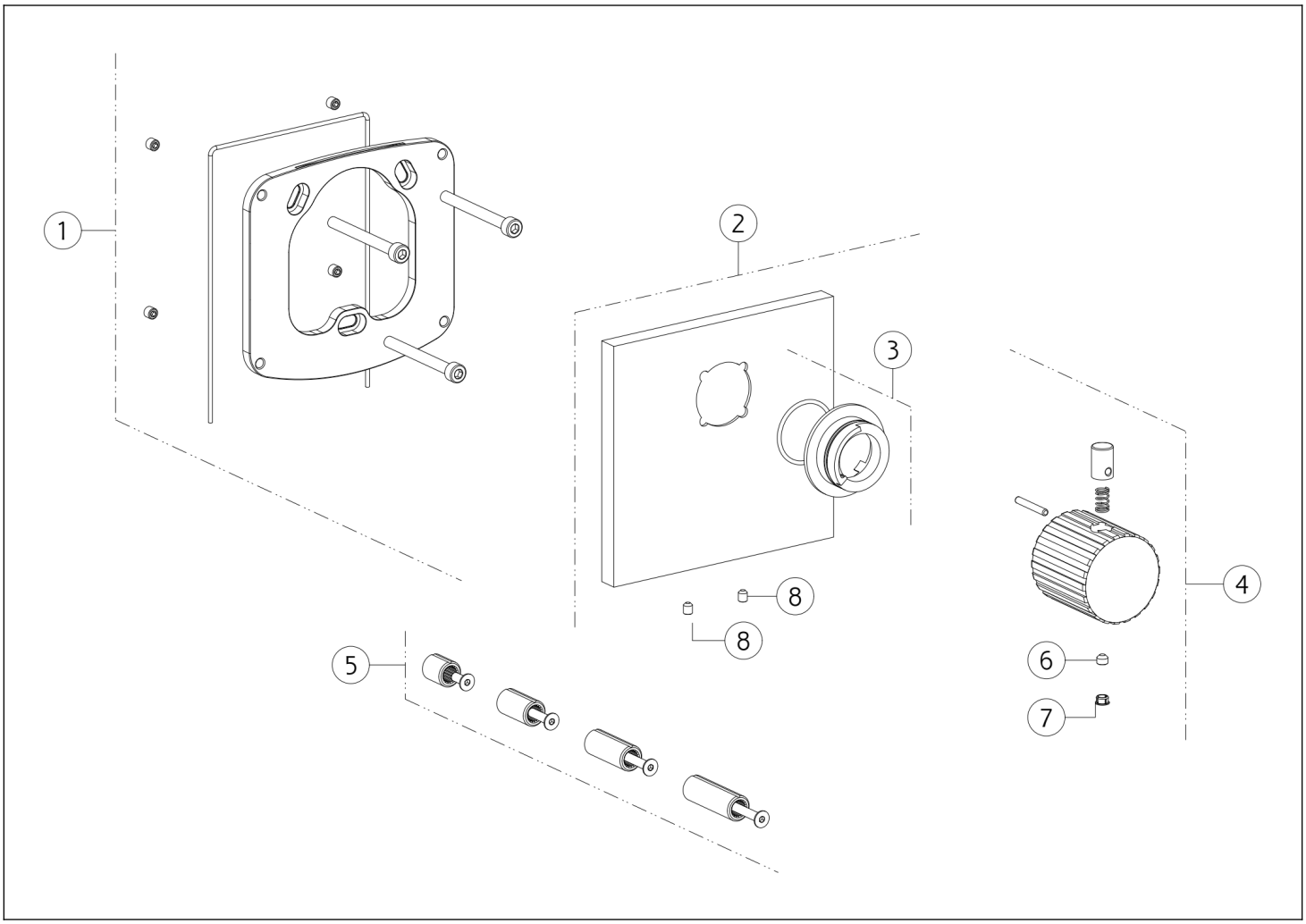

N°	Code	Description
1	SP03897	BACK PLATE
2	SP03895	FINISHING PLATE
3	SP01739	INDICATOR RING
4	SP05560	HANDLE

N°	Code	Description
5	SP01931	EXTENSION
6	SP00137	GRUB SCREW
7	SP00002	SCREW COVER
8	SP02093	GRUB SCREW

Gessi S.p.A. Parco Gessi, 13037 Serravalle Sesia (Vercelli) Italy Tel. +39 0163 454111 Fax. +39 0163 453150 - www.gessi.com - gessi@gessi.it This drawing, as required by law, may not be made public or reproduced without the written authorization of GESSI S.p.A. Copyright GESSI S.p.A.