GESSI

75407

GPF7540700000G000

INCASTRI

validity date
≥ 04/2026



Wall-mounted tumbler.

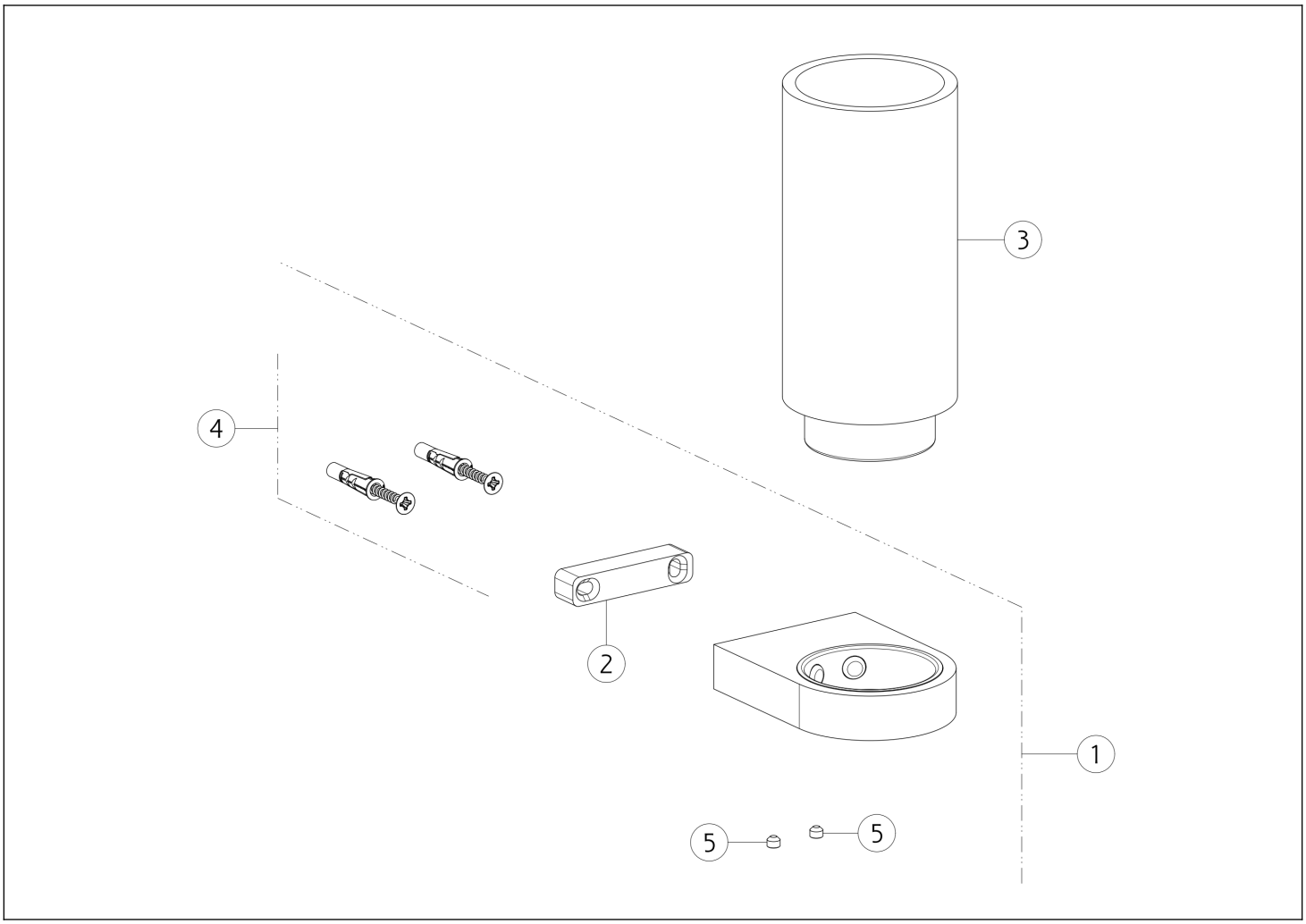

N°	Code	Description
1	SP05584	WALL-MOUNTED HOLDER
2	SP05585	WALL-MOUNTED HOLDER
3	SP05587	TUMBLER

N°	Code	Description
4	SP00031	FIXING KIT
5	SP00137	GRUB SCREW

Gessi S.p.A. Parco Gessi, 13037 Serravalle Sesia (Vercelli) Italy Tel. +39 0163 454111 Fax. +39 0163 453150 - www.gessi.com - gessi@gessi.it This drawing, as required by law, may not be made public or reproduced without the written authorization of GESSI S.p.A. Copyright GESSI S.p.A.