GESSI

75437

GPF7543700000G000

INCASTRI

validity date
≥ 04/2026



Standing soap dispenser.

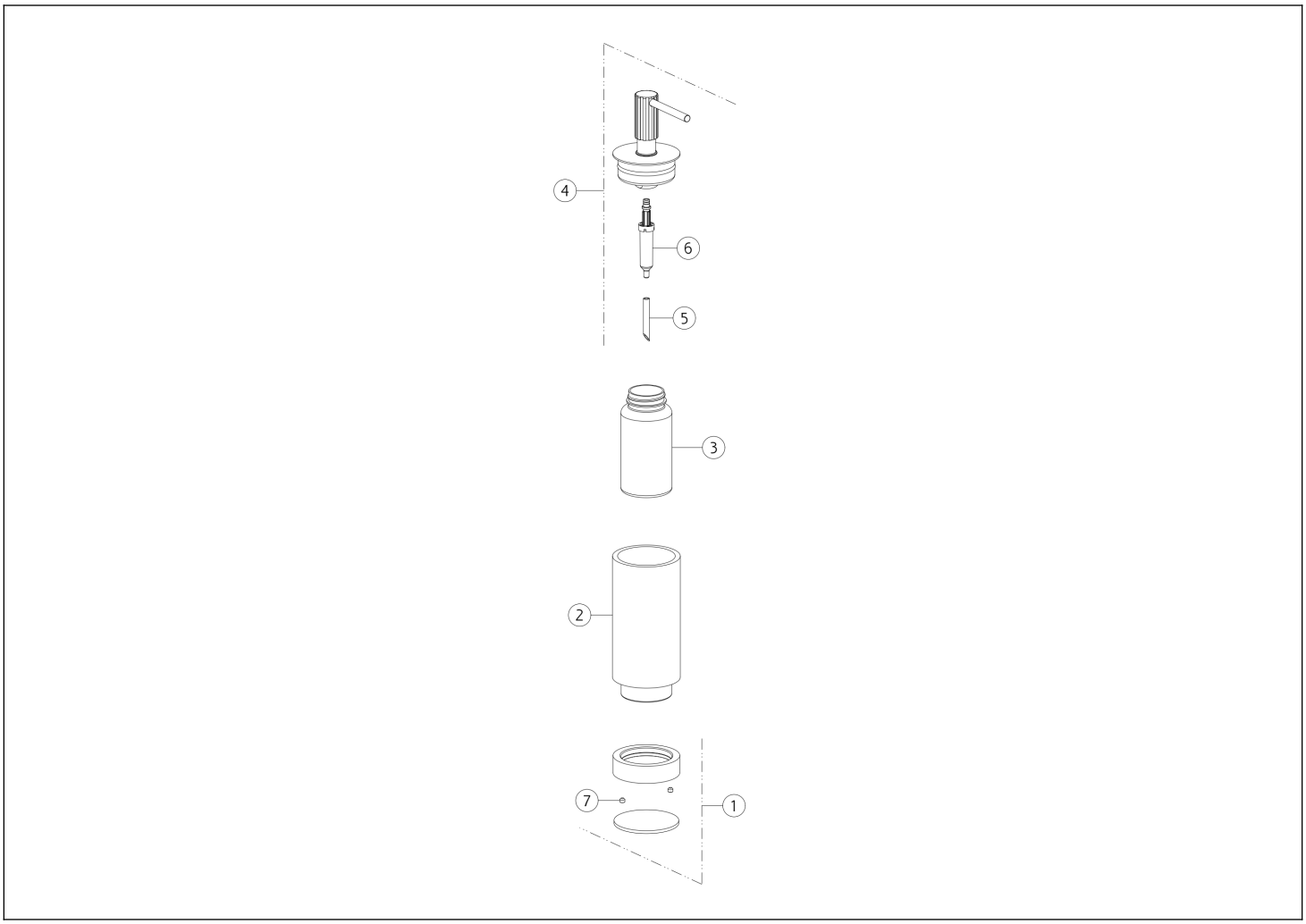

N°	Code	Description
1	SP05759	HOLDER
2	SP05754	TUMBLER
3	SP05752	SOAP DISPENSER CONTAINER
4	SP05751	DISPENSER

N°	Code	Description
5	SP00198	TUBE
6	SP00040	DISPENSER PUMP
7	SP00137	GRUB SCREW

Gessi S.p.A. Parco Gessi, 13037 Serravalle Sesia (Vercelli) Italy Tel. +39 0163 454111 Fax. +39 0163 453150 - www.gessi.com - gessi@gessi.it This drawing, as required by law, may not be made public or reproduced without the written authorization of GESSI S.p.A. Copyright GESSI S.p.A.