GESSI

75500

GPF7550000000G000

INCASTRI

validity date
≥ 02/2026



Wall-mounted towel rail, 45 cm.

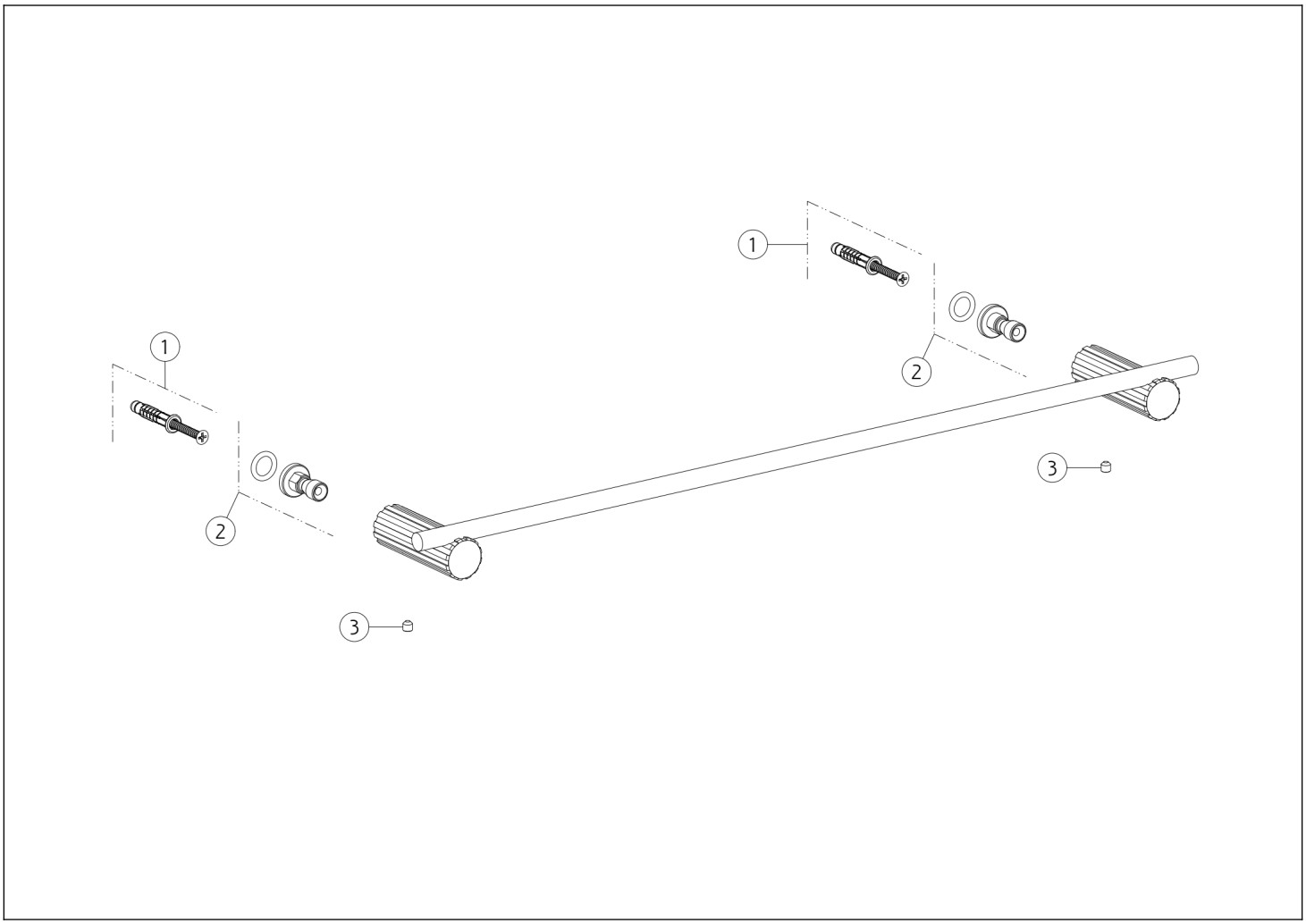

N°	Code	Description
1	SP05602	FIXING KIT
2	SP03182	WALL-MOUNTED HOLDER

N°	Code	Description
3	SP00610	GRUB SCREW

Gessi S.p.A. Parco Gessi, 13037 Serravalle Sesia (Vercelli) Italy Tel. +39 0163 454111 Fax. +39 0163 453150 - www.gessi.com - gessi@gessi.it This drawing, as required by law, may not be made public or reproduced without the written authorization of GESSI S.p.A. Copyright GESSI S.p.A.