GESSI

75540

GPF7554000000G000

INCASTRI

validity date
≥ 07/2026



Set of 2 internal door handles with return spring and Patent-type escutcheon. With square spindle, compatible with 7/8/9 mm square spindle locks.

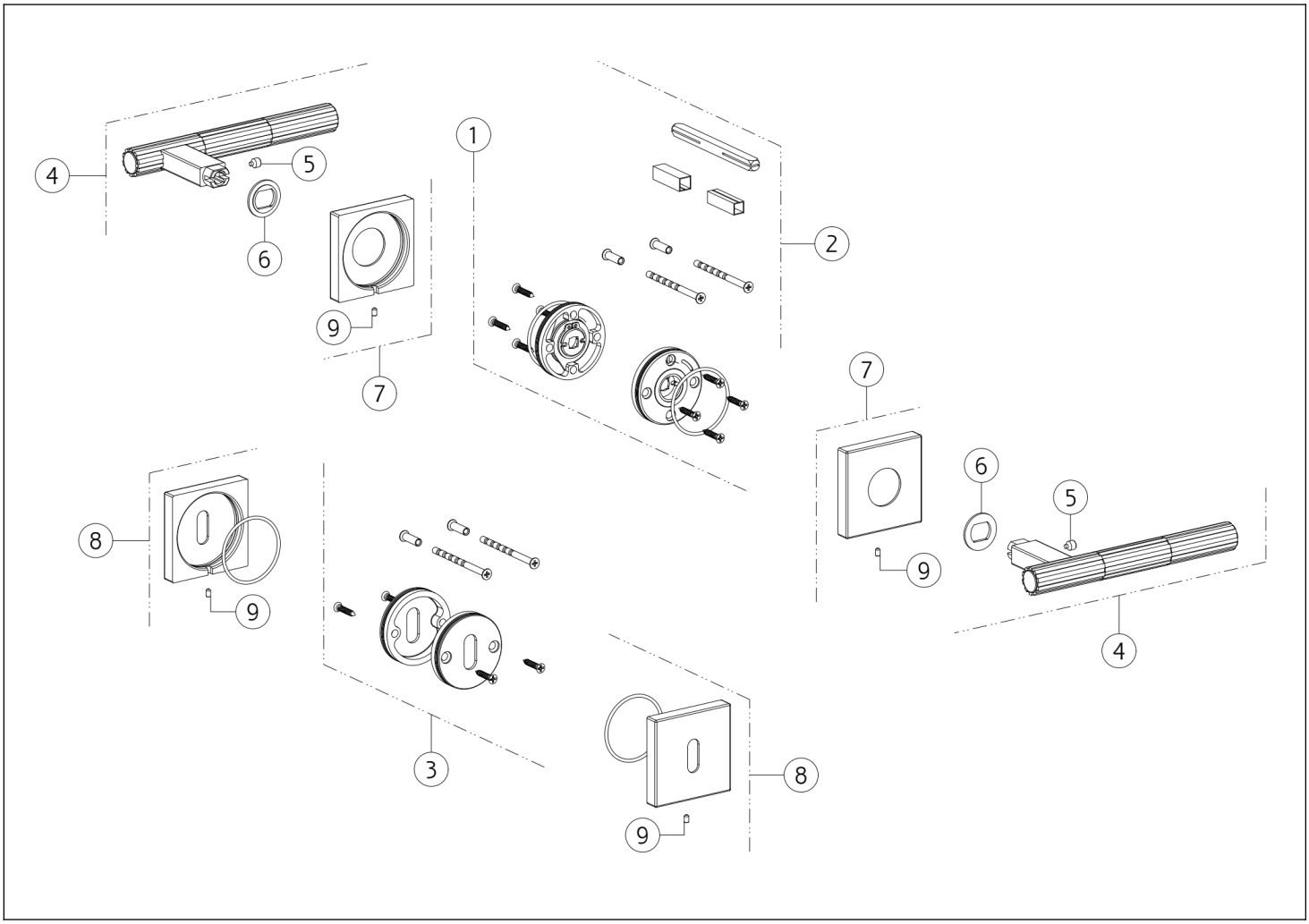

N°	Code	Description
1	SP05649	RETURN SPRING
2	SP05648	PIN
3	SP05682	FLANGE
4	SP05645	HANDLE
5	SP05646	GRUB SCREW

N°	Code	Description
6	SP05647	RING
7	SP05549	ROSETTE
8	SP05681	ROSETTE
9	SP05650	GRUB SCREW

Gessi S.p.A. Parco Gessi, 13037 Serravalle Sesia (Vercelli) Italy Tel. +39 0163 454111 Fax. +39 0163 453150 - www.gessi.com - gessi@gessi.it This drawing, as required by law, may not be made public or reproduced without the written authorization of GESSI S.p.A. Copyright GESSI S.p.A.