GESSI

75541

GPF7554100000G000

INCASTRI

validity date
≥ 08/2026



Set of 2 internal door handles with return spring and Yale-type escutcheon. With square spindle, compatible with 7/8/9 mm squarespindle locks.

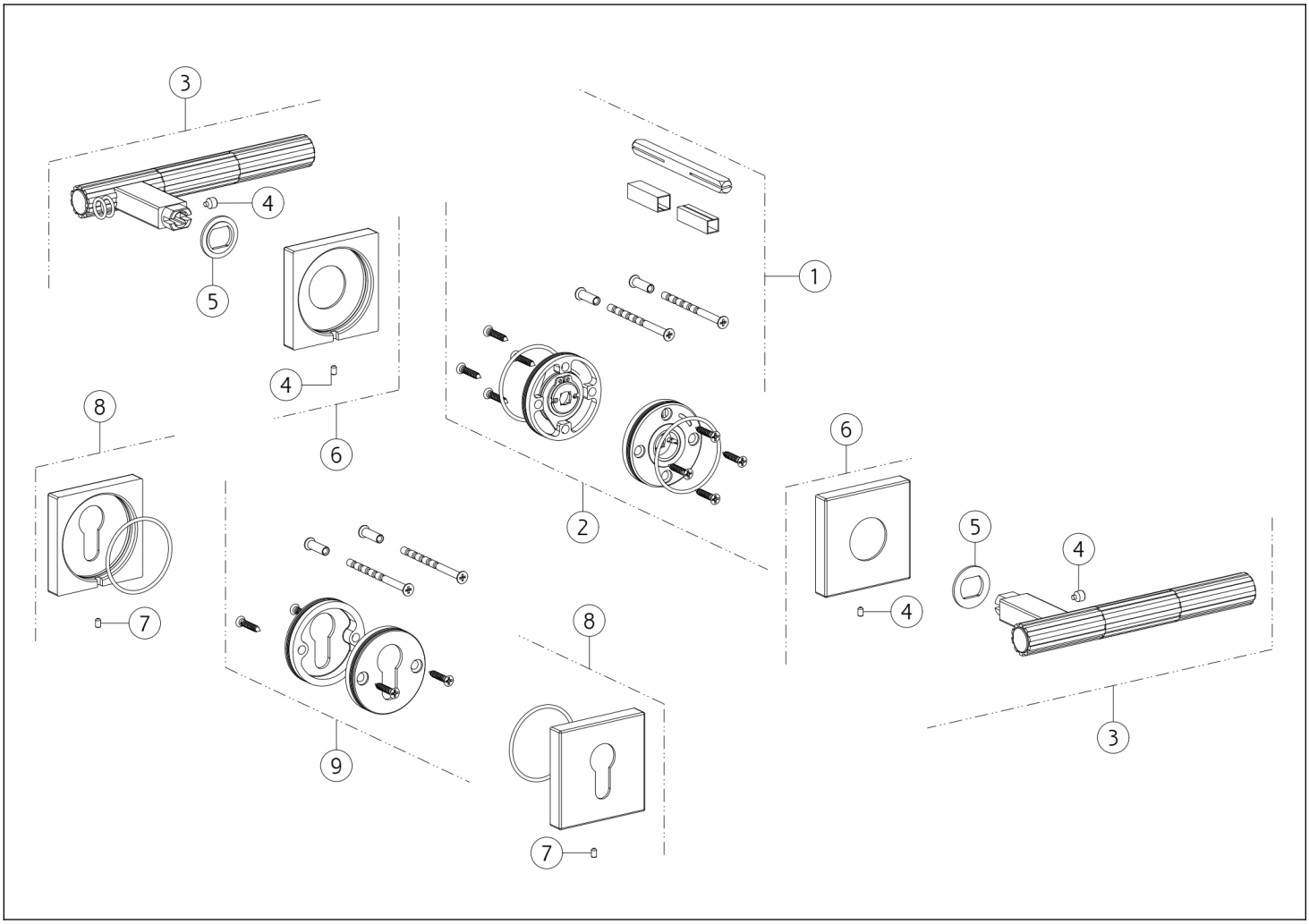

N°	Code	Description
1	SP05648	PIN
2	SP05649	RETURN SPRING
3	SP05645	HANDLE
4	SP05646	GRUB SCREW
5	SP05647	RING

N°	Code	Description
6	SP05549	ROSETTE
7	SP05650	GRUB SCREW
8	SP05651	ROSETTE
9	SP05652	BODY

Gessi S.p.A. Parco Gessi, 13037 Serravalle Sesia (Vercelli) Italy Tel. +39 0163 454111 Fax. +39 0163 453150 - www.gessi.com - gessi@gessi.it This drawing, as required by law, may not be made public or reproduced without the written authorization of GESSI S.p.A. Copyright GESSI S.p.A.