GESSI

75543

GPF7554300000G000

INCASTRI

validity date
≥ 05/2026



Door lock. With square spindle, compatible with 6/8 mm square spindle locks.

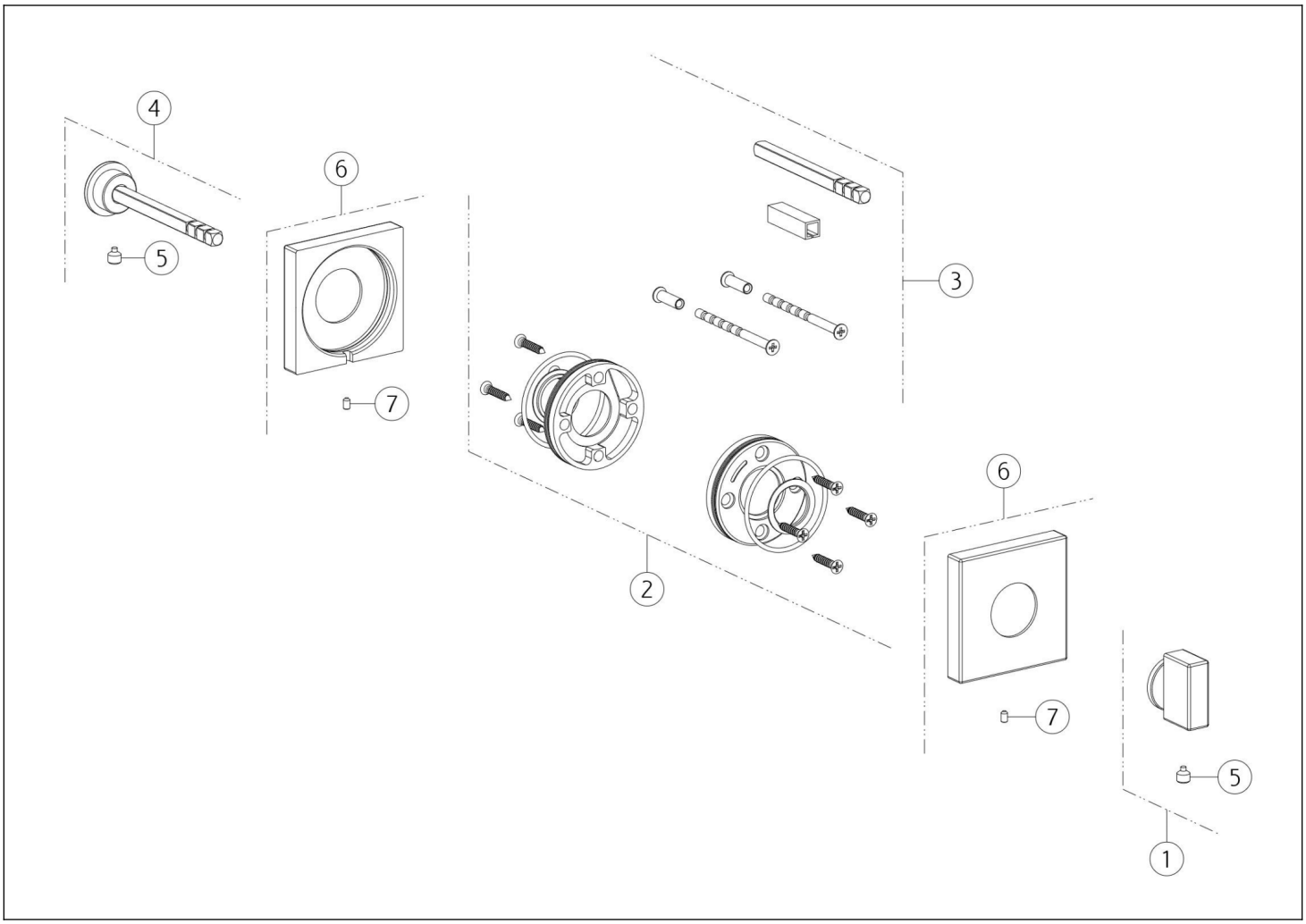

N°	Code	Description
1	SP05740	LEVER
2	SP05741	SPRING
3	SP05742	PIN
4	SP05743	PLUG

N°	Code	Description
5	SP05646	GRUB SCREW
6	SP05549	ROSETTE
7	SP05650	GRUB SCREW

Gessi S.p.A. Parco Gessi, 13037 Serravalle Sesia (Vercelli) Italy Tel. +39 0163 454111 Fax. +39 0163 453150 - www.gessi.com - gessi@gessi.it This drawing, as required by law, may not be made public or reproduced without the written authorization of GESSI S.p.A. Copyright GESSI S.p.A.