GESSI

75611

validity date
≥ 03/2026



GPF7561100000G000

PLACCHE WC

Cover plate GEBERIT SIGMA 8 & 12

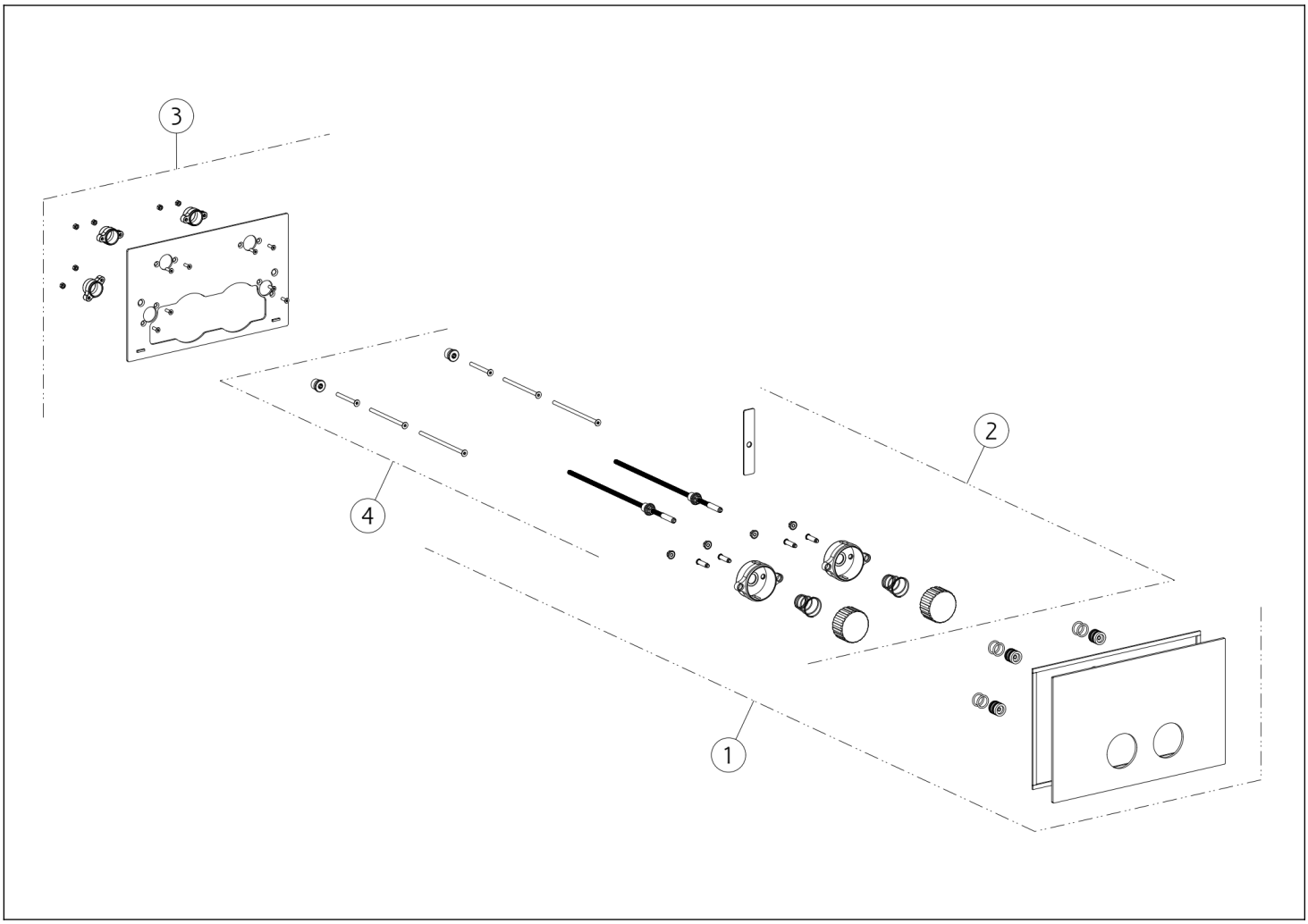

N°	Code	Description
1	SP05608	FINISHING PLATE
2	SP05609	PUSH-BUTTON

N°	Code	Description
3	SP02794	BACK PLATE
4	SP02436	FIXING KIT

Gessi S.p.A. Parco Gessi, 13037 Serravalle Sesia (Vercelli) Italy Tel. +39 0163 454111 Fax. +39 0163 453150 - www.gessi.com - gessi@gessi.it This drawing, as required by law, may not be made public or reproduced without the written authorization of GESSI S.p.A. Copyright GESSI S.p.A.