GESSI

75617

validity date
≥ 03/2026



GPF7561700000G000

PLACCHE WC

Cover plate TECE

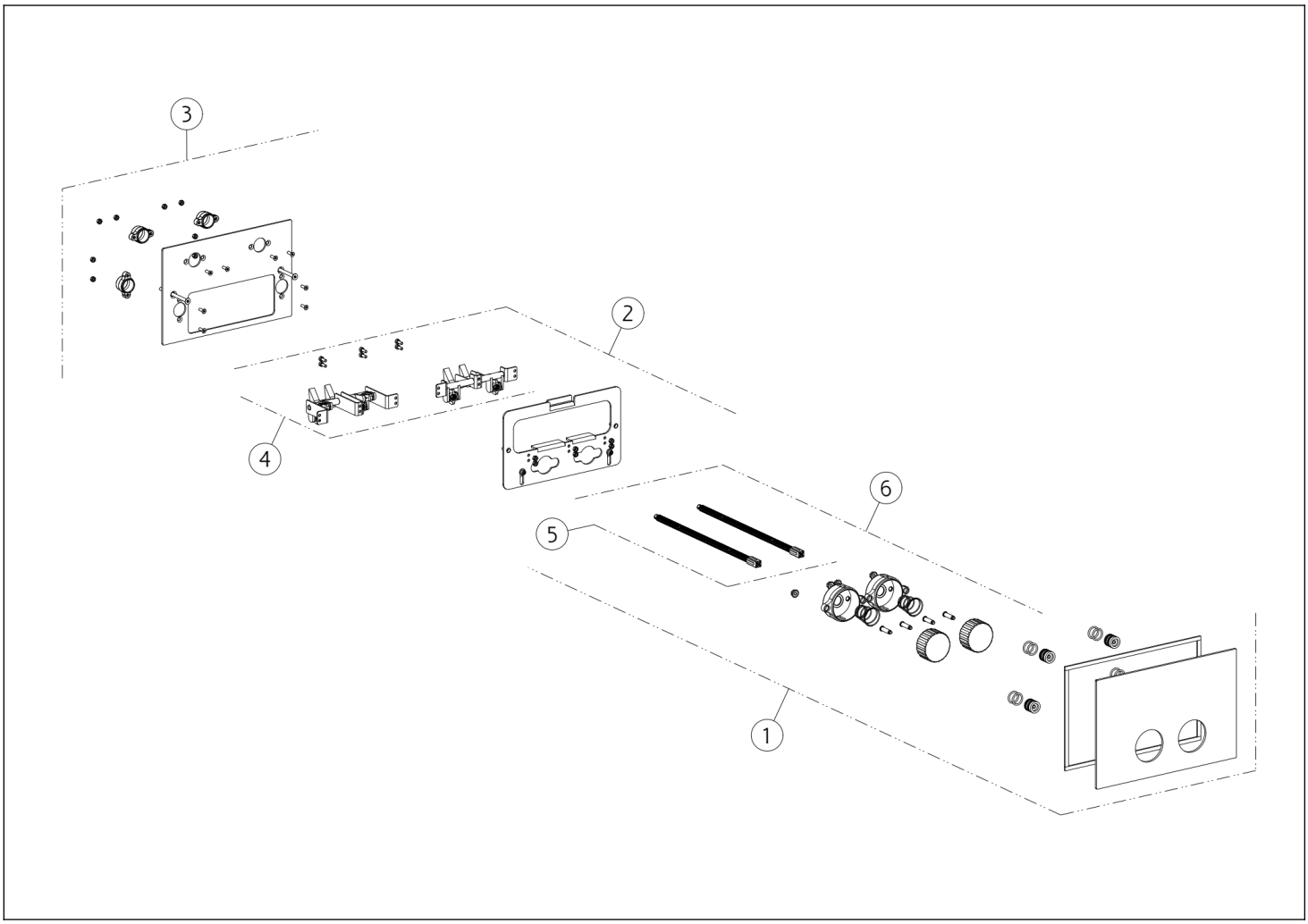

N°	Code	Description
1	SP02737	FINISHING PLATE
2	SP02839	FIXING KIT
3	SP02840	BACK PLATE

N°	Code	Description
4	SP04177	DRIVE KIT
5	SP05293	FIXING KIT
6	SP05294	PUSH-BUTTON

Gessi S.p.A. Parco Gessi, 13037 Serravalle Sesia (Vercelli) Italy Tel. +39 0163 454111 Fax. +39 0163 453150 - www.gessi.com - gessi@gessi.it This drawing, as required by law, may not be made public or reproduced without the written authorization of GESSI S.p.A. Copyright GESSI S.p.A.