GESSI

INCASTRI

75540

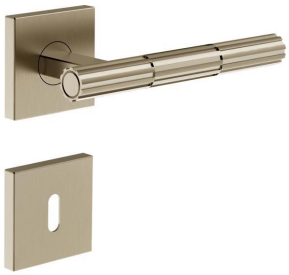

Set of 2 internal door handles with return spring and Patent-type escutcheon.
With square spindle, compatible with 7/8/9 mm square spindle locks.

TECHNICAL FEATURES

- **Height:** 60 mm
- **Width:** 69 mm
- **Depth:** 159 mm
- **Handle type:** Handle on rosette
- **Equipped with return spring:** Return spring included
- **Equipped with square spindle for handle:** Square spindle included
- **Handle square section:** 7 mm, 8 mm, 9 mm
- **Includes key inlet:** Key Inlet included
- **Key type:** Patent
- **Door thickness:** 35 mm - 55 mm

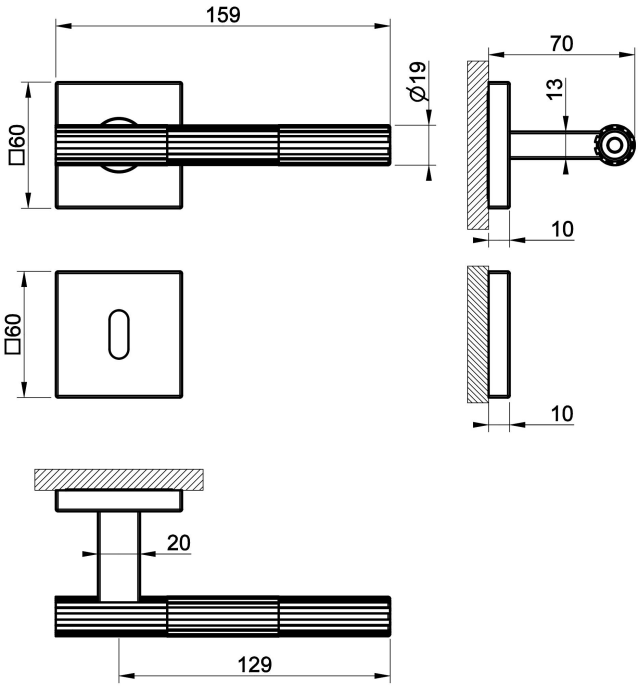

CERTIFICATIONS

Production managed by a certified Quality System compliant with ISO 9001:2015 For additionals approved contact Gessi S.P.A.

INDICATIONS FOR CLEANING

Clean only with a new microfiber cloth and soapy water and dry with a dry cloth. Detergents, solvents, alcohol, abrasive sponges, wire, wool, alcohol, etc., should not be used as these could irreparably damage product surfaces compromising its aesthetics and brilliance.

ACCESSORIES AND FITTINGS

For additional matching bathroom accessories and fittings available, see official Gessi price list.

FINISHES CHARACTERISTICS

CHROME

Gessi products have a Chromium Plating finish. This is a high-quality coating composed of a first layer of nickel, a second layer of chromium, a very shiny appearance, high resistance to corrosion and abrasion.

LAQUERED

Gessi products have an industrial lacquer finish. This coating is obtained by means of a special industrial process that involves spraying the lacquer onto the product with a subsequent firing process at a high temperature. The lacquer used is of the highest quality and ensures maximum resistance and durability. The different lacquer types depend on the product type.

PVD COLORS

Gessi products have a PVD finish. This coating is obtained through the PVD (Physical Vapour Deposition) process, which is a state-of-the-art coating process that is highly resistant to abrasion and corrosion. The process is carried out in a vacuum chamber, where the material to be deposited is heated and vaporized, and then condensed onto the product to be coated. The result is a thin, uniform, and highly resistant film.

STAINLESS STEEL

Gessi products have a solid Stainless Steel finish. This is a very high-quality finish, with a very high resistance to corrosion and abrasion. The finish is obtained by means of a special brushing process, which gives the product a very elegant and modern appearance. The finish is also very easy to clean and maintain.

For additionals finishes contact Gessi S.P.A.

Product, measurements and specifications shown are subject to change without notice. Please refer to the current price list for further information Gessi S.p.A. Parco Gessi, 13037 Serravalle Sesia (Vercelli) Italy - Tel. +39 0163 454111 - www.gessi.com - lead@gessi.it