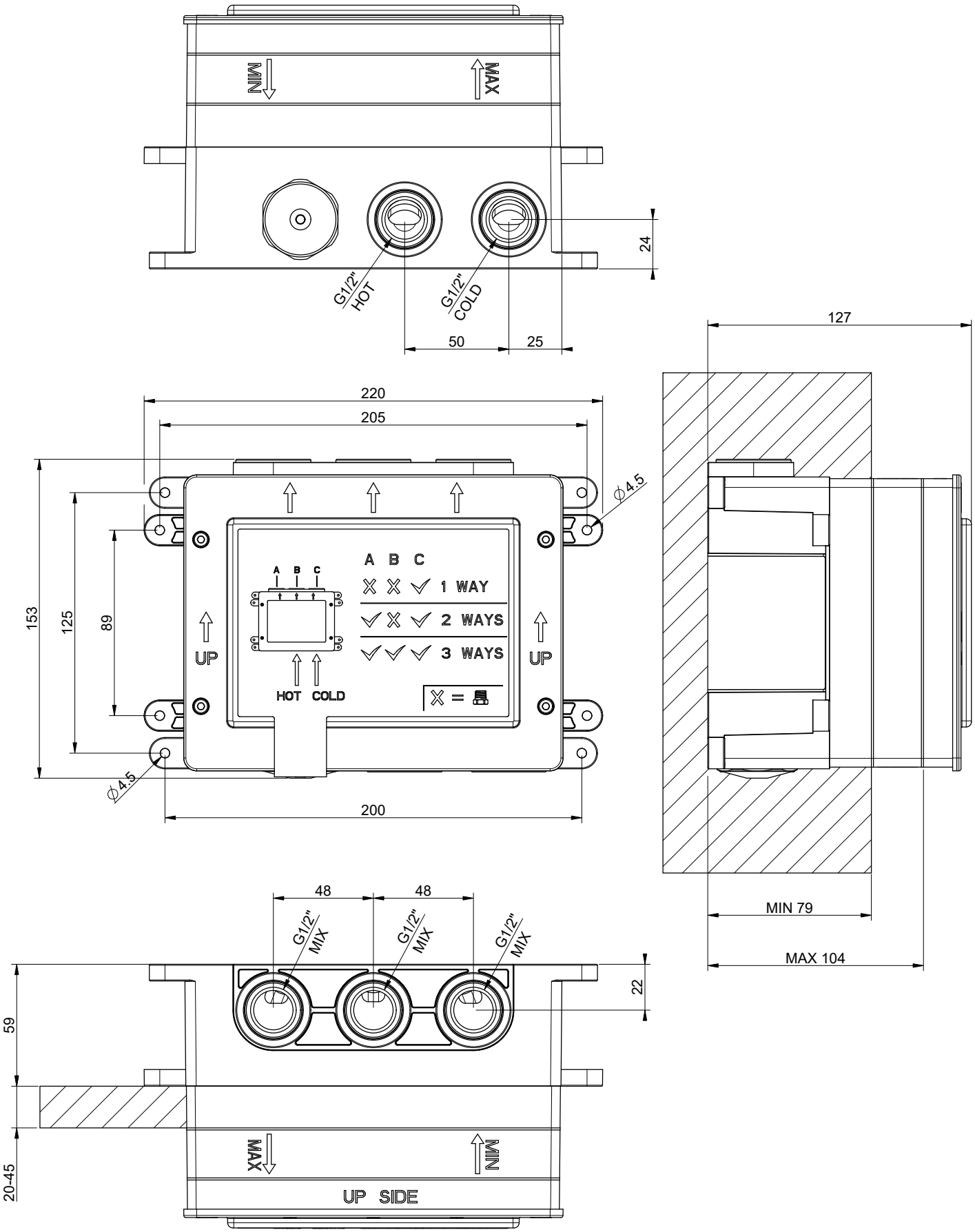

GESSI

PARTI INCASSO 63001

PARTE INCASSO PER MISCELATORE TERMOSTATICO A PULSANTI UNIVERSALE

Formato *A4*

Dis.: GPF6300100000A004

Gessi S.p.A.Parco Gessi,13037 Serravalle Sesia (Vercelli) Italy Tel.0039 0163 454111 Fax.0039 0163 453150 www.gessi.com e-mail:gessi@gessi.it

This drawing by its legislation cannot be disclosed or reproduced without a written authorization released by GESSI S.p.A. - 2019 Copyright© GESSI S.p.A.