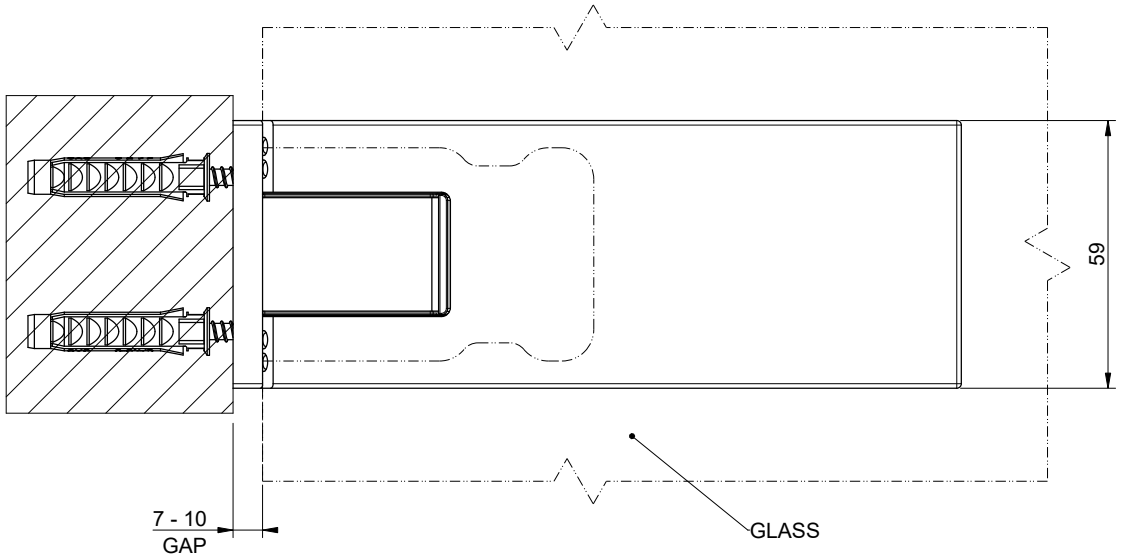

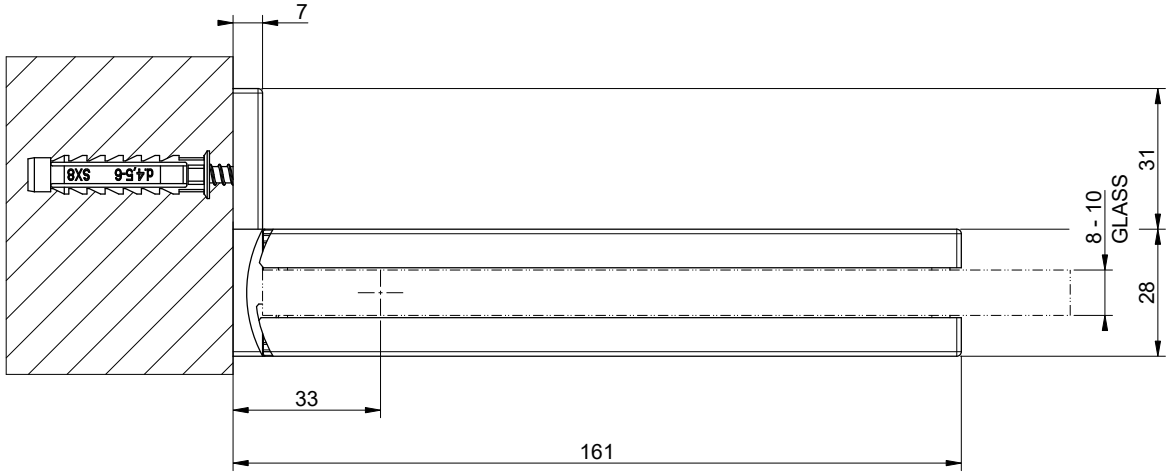

GLASS CUT

SCALA 1:1

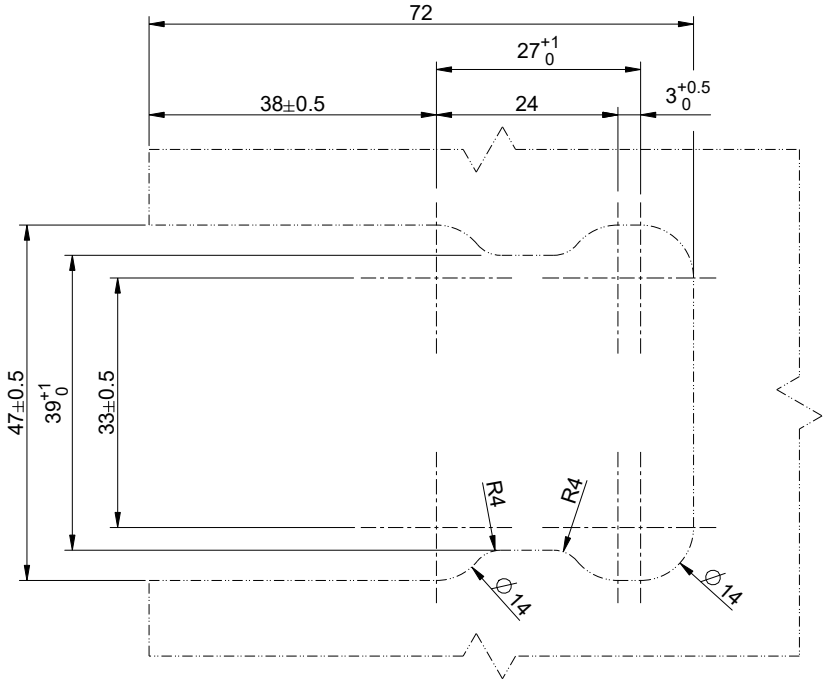

TEXTURE DETAIL

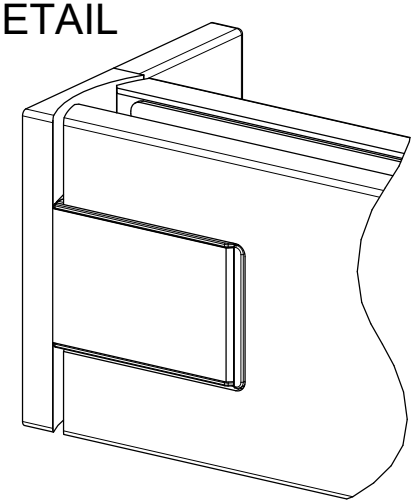

DOOR LIMITS:

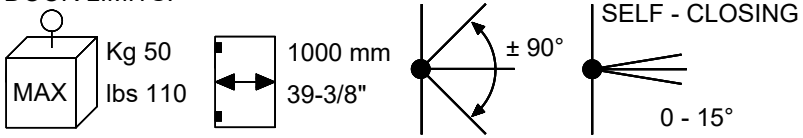

GESSI	**SHOWER G 67001**	Formato *A4*
	CERNIERA A SCATTO MURO-VETRO 8-10MM - LISCIA	Dis.: GPF6700120000G000

Gessi S.p.A.Parco Gessi,13037 Serravalle Sesia (Vercelli) Italy Tel.0039 0163 454111 Fax.0039 0163 453150 www.gessi.com e-mail:gessi@gessi.it

This drawing by its legislation cannot be disclosed or reproduced without a written authorization released by GESSI S.p.A. - 2024 Copyright© GESSI S.p.A.