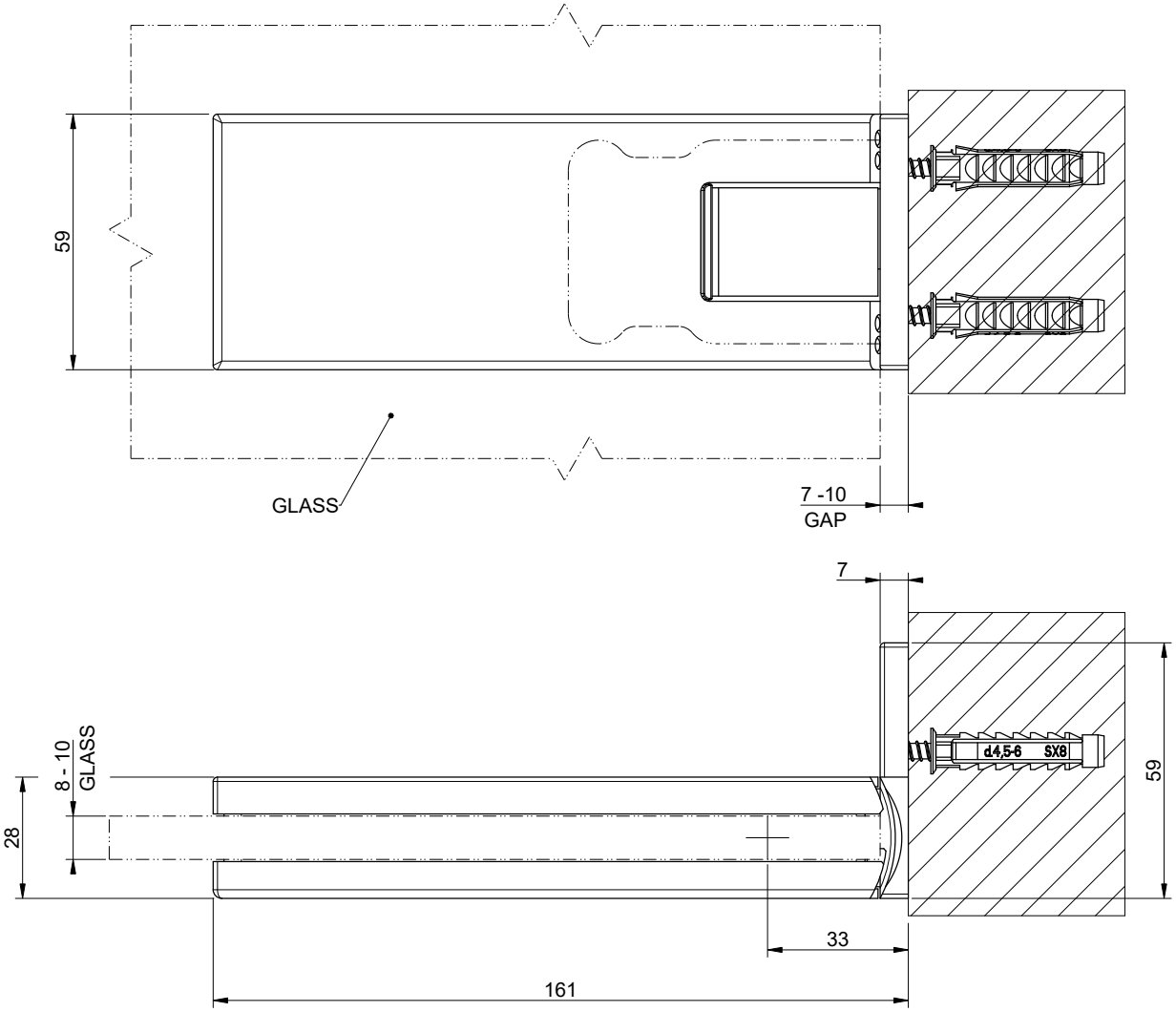

GLASS CUT

SCALA 1:1

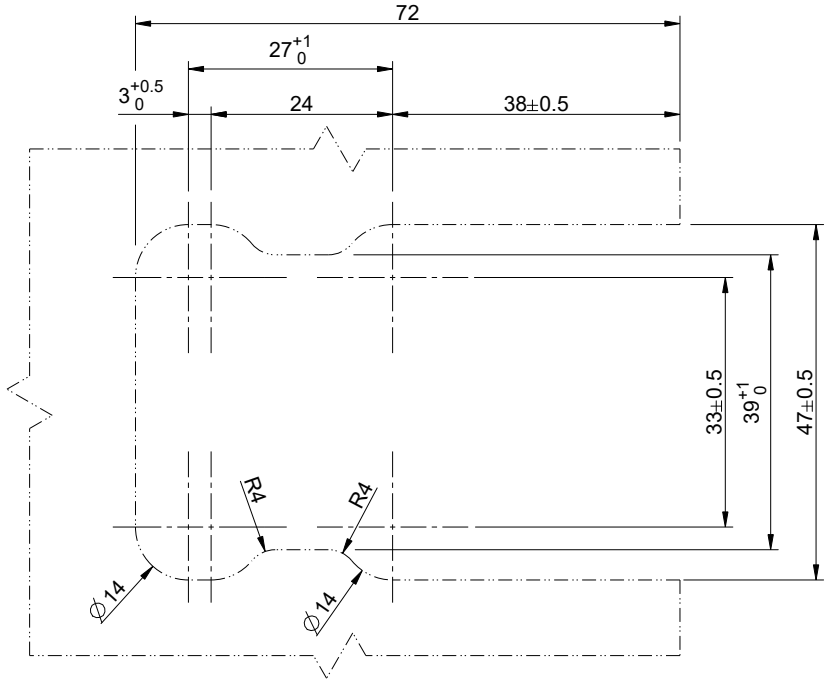

TEXTURE DETAIL

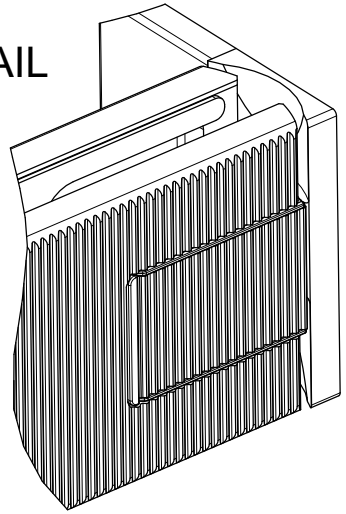

DOOR LIMITS:

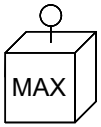

Kg 40
lbs 88

900 mm
35-7/16"

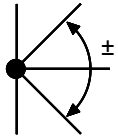

SELF - CLOSING

0 - 30°

LIFT-LOWER
FUNCTION
+5 mm
+3/16"

GESSI

SHOWER G 67511

CERNIERA CON ALZATA MURO-VETRO DESTRA 8-10MM - RIGATA

Formato *A4*

Dis.: GPF6751110000G000

Gessi S.p.A.Parco Gessi,13037 Serravalle Sesia (Vercelli) Italy Tel.0039 0163 454111 Fax.0039 0163 453150 www.gessi.com e-mail:gessi@gessi.it

This drawing by its legislation cannot be disclosed or reproduced without a written authorization released by GESSI S.p.A. - 2024 Copyright© GESSI S.p.A.