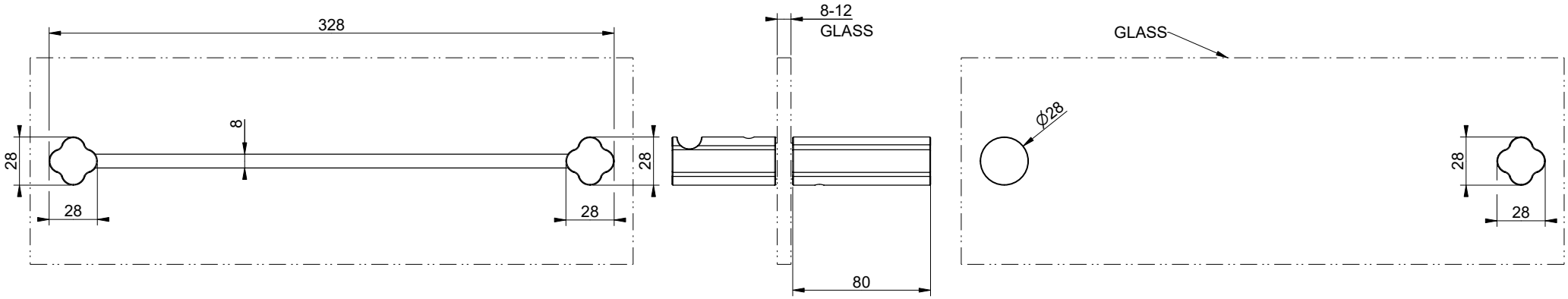

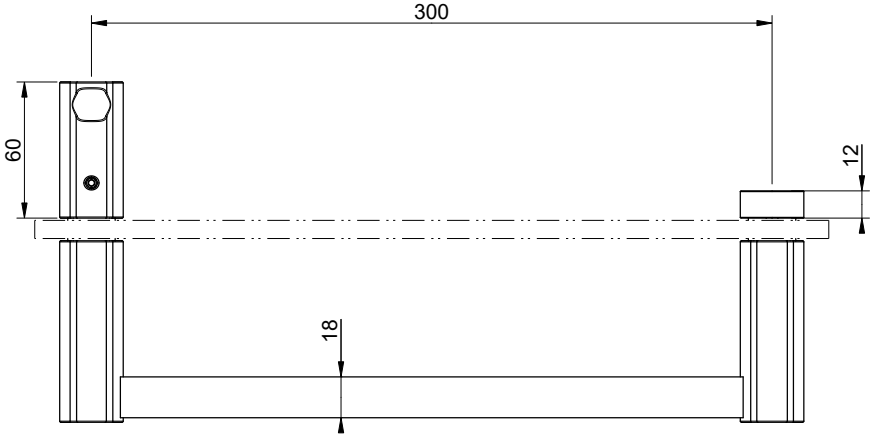

INSTALLATION TYPE A

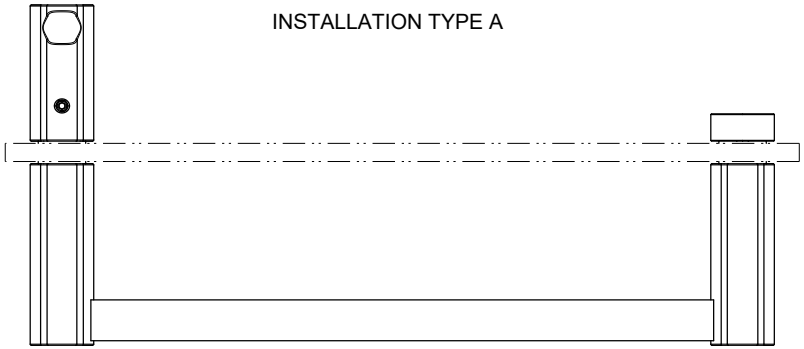

INSTALLATION TYPE B

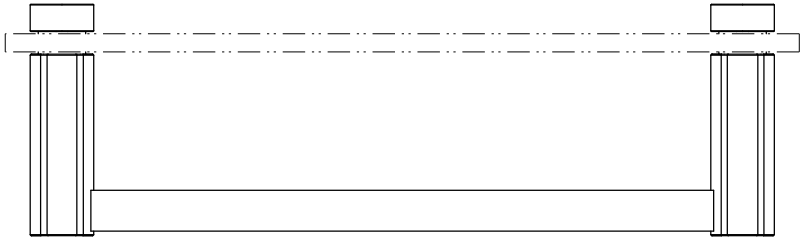

GESSI	**LUDOVICA 76511**	Formato *A4*
	PORTA SALVIETTA PER VETRO 30CM	Dis.: GPF7651100000G000

Gessi S.p.A.Parco Gessi,13037 Serravalle Sesia (Vercelli) Italy Tel.0039 0163 454111 Fax.0039 0163 453150 www.gessi.com e-mail:gessi@gessi.it

This drawing by its legislation cannot be disclosed or reproduced without a written authorization released by GESSI S.p.A. - 2025 Copyright© GESSI S.p.A.

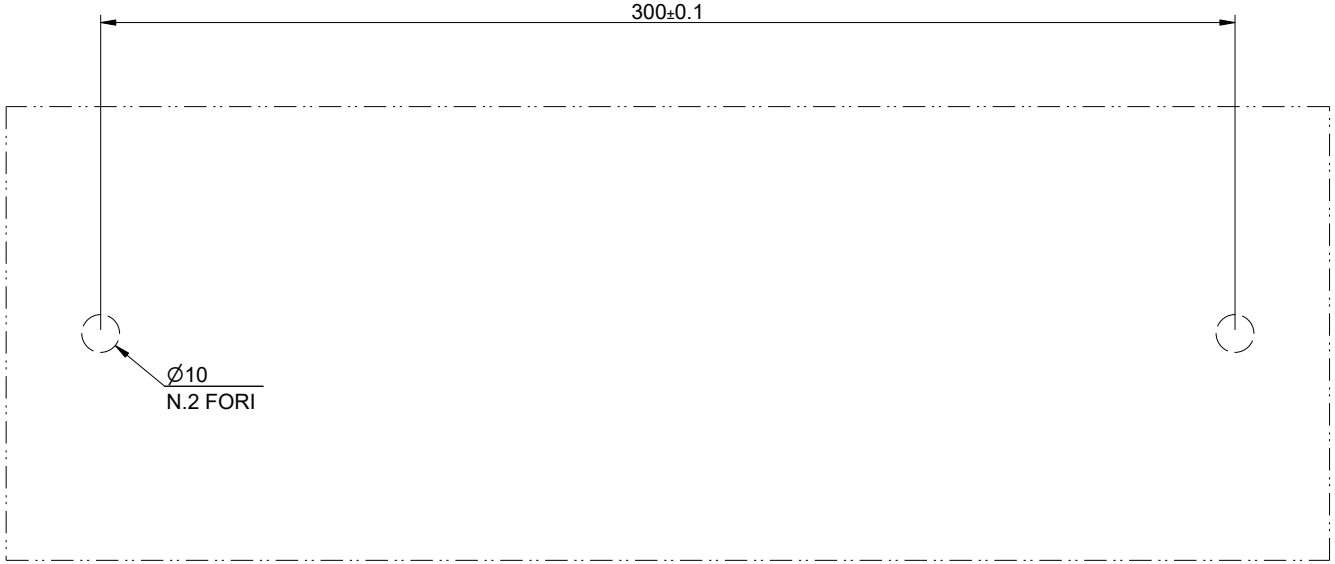

FORATURE PER VETRI - DRILLING FOR GLASS - PERCAGE POURVITRE - BOHRUNGEN FUR GLAS - PERFORACION POR CRISTAL

USARE GRANI M5x25 SU VETRI DI SPESSORE 8 mm e GRANI M5x30 PER QUELLI DI SPESSORE 10/12 mm
USE M5x25 SCREWS ON 8 mm THICK GLASS AND M5x30 FOR 10/12 mm THICK GLASS
UTILISEZ DES VIS M5x25 SUR UN VERRE DE 8 mm D'ÉPAISSEUR ET M5x30 POUR UN VERRE DE 10/12 mm D'ÉPAISSEUR
VERWENDEN SIE M5x25-SCHRAUBEN AUF 8 mm DICKEN GLAS UND M5x30 FÜR 10/12 mm DICKES GLAS
UTILICE TORNILLOS M5x25 EN CRISTAL DE 8 mm DE GROSOR Y M5x30 PARA CRISTAL DE 10/12 mm DE GROSOR

GESSI	**LUDOVICA 76511**	Formato *A4*
	PORTA SALVIETTA PER VETRO 30CM	Dis.: GPF7651100000G000

Gessi S.p.A.Parco Gessi,13037 Serravalle Sesia (Vercelli) Italy Tel.0039 0163 454111 Fax.0039 0163 453150 www.gessi.com e-mail:gessi@gessi.it

This drawing by its legislation cannot be disclosed or reproduced without a written authorization released by GESSI S.p.A. - 2025 Copyright© GESSI S.p.A.