Le misure sono soggette alle tolleranze definite dalle relative norme di riferimento / Measures are subject to tolerances as provided by the relevant standards

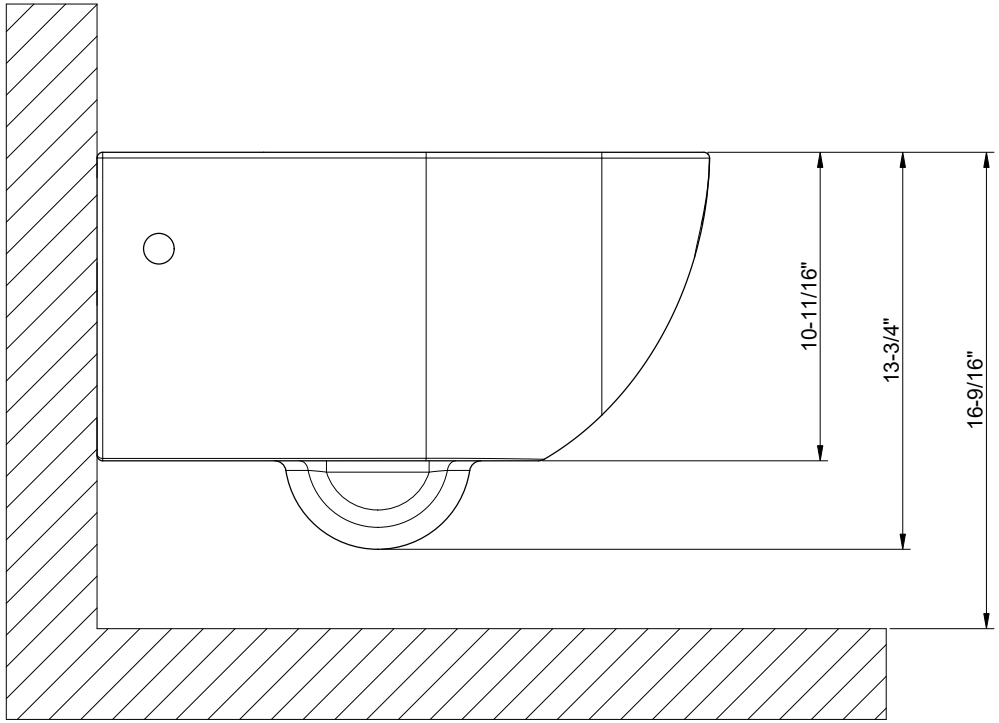

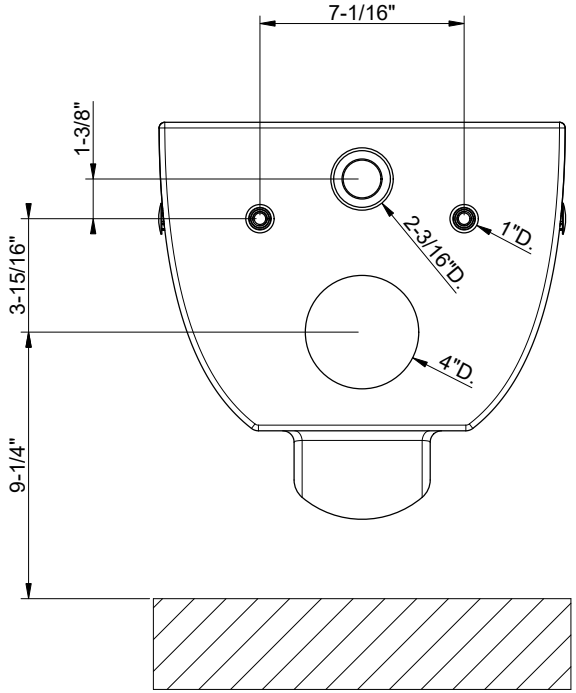

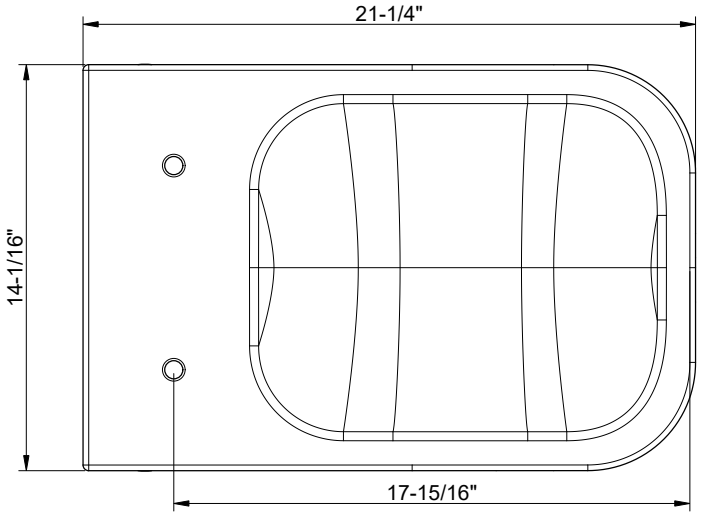

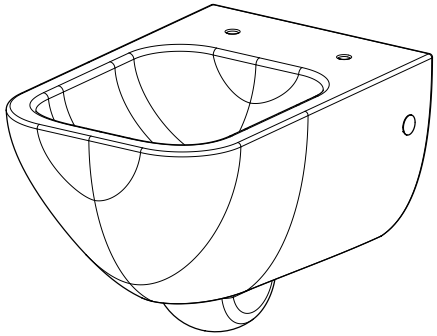

GESSI

GOCCIA 39114

WC SOSPESO RIMLESS SENZA SEDILE

Formato *A4*

Dis.: GPF3911400000G000

Gessi S.p.A.Parco Gessi,13037 Serravalle Sesia (Vercelli) Italy Tel.0039 0163 454111 Fax.0039 0163 453150 www.gessi.com e-mail:gessi@gessi.it

This drawing by its legislation cannot be disclosed or reproduced without a written authorization released by GESSI S.p.A. - 2022 Copyright© GESSI S.p.A.