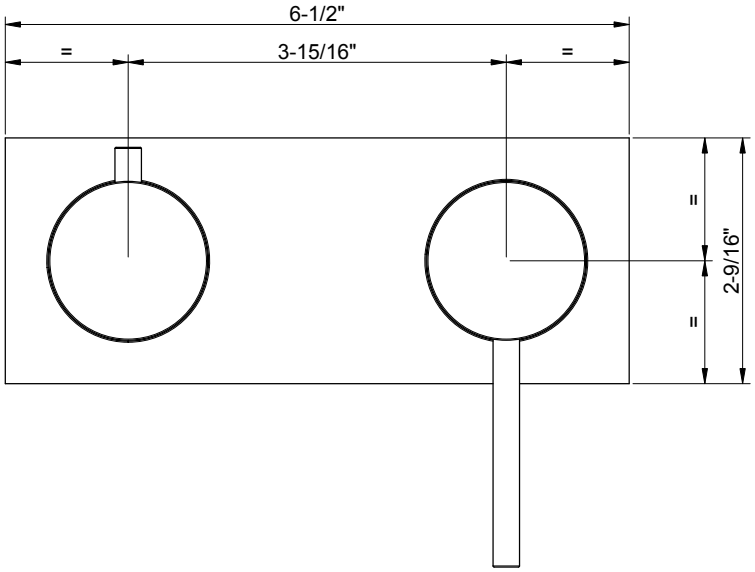


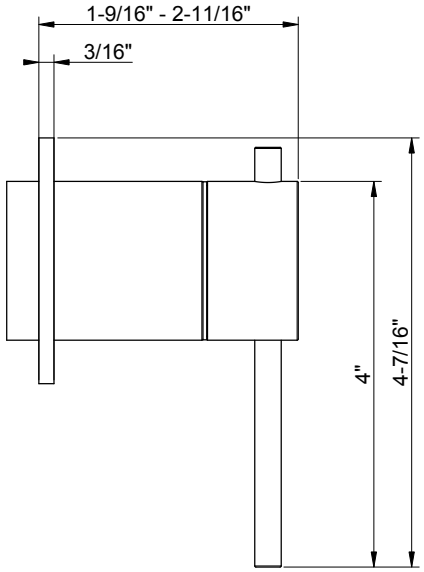


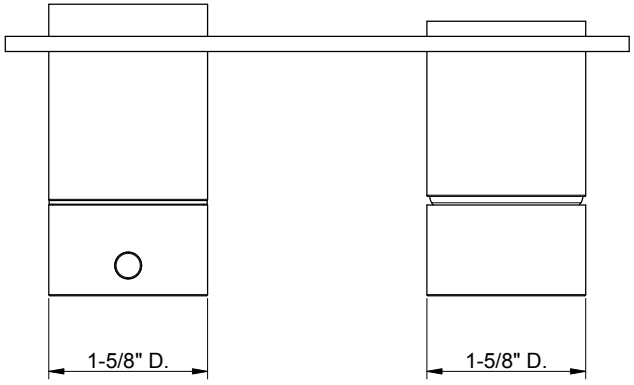


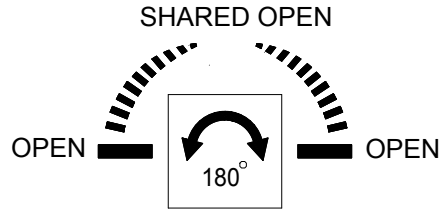


| | | |
|---|---|---|
| GESSI | **GESSI 316 54079** | Formato *A4* |
| | PARTE ESTERNA DOCCIA 2 VIE | Dis.: GPF5407900000G000 |

Gessi S.p.A.Parco Gessi,13037 Serravalle Sesia (Vercelli) Italy Tel.0039 0163 454111 Fax.0039 0163 453150 www.gessi.com e-mail:gessi@gessi.it

*This drawing by its legislation cannot be disclosed or reproduced without a written authorization released by GESSI S.p.A. - 2017 Copyright© GESSI S.p.A.*